Lucky Motor Corporation Limited

Survey # 78-79 107 & NC97/98,
Bin Qasim Industrial Park,
Deh Pipri,Pakistan Steel,
Karachi - Pakistan

SORENTO OWNER'S MANUAL

OWNER'S MANUAL



KIA
The Power to Surprise

SORENTO

The car represented on the cover of the manual might show optional equipment, which is not necessarily available for every type of vehicle.

Kia, THE COMPANY

Thank you for becoming the owner of a new Kia vehicle.

As a global car manufacturer focused on building high-quality, value for money prices, Kia Motors is dedicated to providing you with a customer service experience that exceeds your expectations.

At all of our Kia dealerships you will be treated with warmth, hospitality and professionalism by people who care based on our **"Family-like Care"** promise.

All information contained in this Owner's Manual is accurate at the time of publication. However, Kia reserves the right to make changes at any time so that our policy of continual product improvement can be carried out.

This manual applies to all trims of this vehicle and includes images, descriptions, and explanations of optional as well as standard equipment. As a result, some material in this manual may not be applicable to your specific Kia vehicle. Some images are shown for illustration only and may show features that differ from those on your vehicle.

Enjoy your vehicle and Kia's "Family-like Care" experience!

FOREWORD

Thank you for choosing a Kia vehicle.

This manual will familiarize you with operational, maintenance and safety information about your new vehicle. It is supplemented by a Warranty and Maintenance book that provides important information on all warranties regarding your vehicle. Kia urges you to read these publications carefully and follow the recommendations to help assure enjoyable and safe operation of your new vehicle.

Kia offers a great variety of options, components and features for its various models. Therefore, some of the equipment described in this manual, along with the various illustrations, may not be applicable to your particular vehicle.

The information and specifications provided in this manual were accurate at the time of printing. Kia reserves the right to discontinue or change specifications or design at any time without notice and without incurring any obligation. If you have questions, Kia recommends to check with an authorised Kia dealer/service partner.

Kia assures you of our continuing interest in your motoring pleasure and satisfaction in your Kia vehicle.

All rights reserved. Reproduction by any means, electronic or mechanical, including photocopying, recording, or by any information storage and retrieval system or translation in whole or part is not permitted without written authorization from "Lucky Motor Corporation Limited"

TABLE OF CONTENTS

Introduction	1
Your vehicle at a glance	2
Safety features of your vehicle	3
Features of your vehicle	4
Audio system	5
Driving your vehicle	6
What to do in an emergency	7
Maintenance	8
Specifications & Consumer information	9
Index	I

Introduction

1

How to use this manual 1-2
Fuel requirements 1-3
- Petrol engine 1-3
Vehicle modifications 1-6
Vehicle break-in process 1-6
Vehicle handling instructions 1-6

HOW TO USE THIS MANUAL

We want to help you get the greatest possible driving pleasure from your vehicle. Your Owner's Manual can assist you in many ways. We strongly recommend that you read the entire manual. In order to minimise the chance of death or injury, you must read the WARNING and CAUTION sections in the manual.

Illustrations complement the words in this manual to best explain how to enjoy your vehicle. By reading your manual, you learn about features, important safety information, and driving tips under various road conditions.

The general layout of the manual is provided in the Table of Contents. Use the index when looking for a specific area or subject; it has an alphabetical listing of all information in your manual.

Sections: This manual has nine sections plus an index. Each section begins with a brief list of contents so you can tell at a glance if that section has the information you want.

You will find various WARNINGs, CAUTIONs, and NOTICEs in this manual. These WARNINGs were prepared to enhance your personal safety. You should carefully read and follow ALL procedures and recommendations provided in these WARNINGs, CAUTIONs and NOTICEs.

⚠ WARNING

A WARNING indicates a situation in which harm, serious bodily injury or death could result if the warning is ignored.

⚠ CAUTION

A CAUTION indicates a situation in which damage to your vehicle could result if the caution is ignored.

✻ NOTICE

A NOTICE indicates interesting or helpful information is being provided.

FUEL REQUIREMENTS

Petrol engine

Your new Kia vehicle is designed to use only unleaded fuel having an Octane Rating of RON (Research Octane Number) 91 / AKI (Anti-Knock Index) 87 or higher. (Do not use methanol blended fuels.)

Your new vehicle is designed to obtain maximum performance with UNLEADED FUEL, as well as minimise exhaust emissions and spark plug fouling.

⚠ CAUTION

NEVER USE LEADED FUEL. The use of leaded fuel is detrimental to the catalytic converter and will damage the engine control system's oxygen sensor and affect emission control.

Never add any fuel system cleaning agents to the fuel tank other than what has been specified. (Kia recommends to consult an authorised Kia dealer/service partner for details.)

⚠ WARNING

- **Do not "top off" after the nozzle automatically shuts off when refuelling.**
- **Always check that the fuel cap is installed securely to prevent fuel spillage in the event of an accident.**

Vehicle damage or drivability problems may not be covered by the manufacturer's warranty if they result from the use of:

1. Gasohol containing more than 10% ethanol.
2. Petrol or gasohol containing methanol.
3. Leaded fuel or leaded gasohol.

⚠ CAUTION

Never use gasohol which contains methanol. Discontinue use of any gasohol product which impairs drivability.

Other fuels

Using fuels such as

- Silicone (Si) contained fuel,
- MMT (Manganese, Mn) contained fuel,
- Ferrocene (Fe) contained fuel, and
- Other metalic additives contained fuels,

may cause vehicle and engine damage or cause plugging, misfiring, poor acceleration, engine stalling, catalyst melting, abnormal corrosion, life cycle reduction, etc.

Also, the Malfunction Indicator Lamp (MIL) may illuminate.

✻ NOTICE

Damage to the fuel system or performance problem caused by the use of these fuels may not be covered by your New Vehicle Limited Warranty.

Use of MTBE

Kia recommends avoiding fuels containing MTBE (Methyl Tertiary Butyl Ether) over 15.0% vol. (Oxygen Content 2.7% weight) in your vehicle.

Fuel containing MTBE over 15.0% vol. (Oxygen Content 2.7% weight) may reduce vehicle performance and produce vapour lock or hard starting.

⚠ CAUTION

Your New Vehicle Limited Warranty may not cover damage to the fuel system and any performance problems that are caused by the use of fuels containing methanol or fuels containing MTBE (Methyl Tertiary Butyl Ether) over 15.0% vol. (Oxygen Content 2.7% weight.)

Do not use methanol

Fuels containing methanol (wood alcohol) should not be used in your vehicle. This type of fuel can reduce vehicle performance and damage components of the fuel system, engine control system and emission control system.

Operation in foreign countries

If you are going to drive your vehicle in another country, be sure to:

- Observe all regulations regarding registration and insurance.
- Determine that acceptable fuel is available.

Watch the fuel level in the tank very carefully : If the engine stops through fuel failure, the circuits must be completely purged to restart.

⚠ CAUTION

Do not let any petrol or water enter the tank. This would make it necessary to drain it out and to bleed the lines to avoid jamming the injection pump and damaging the engine.

VEHICLE MODIFICATIONS

This vehicle should not be modified

Installation of Improper / Non-Genuine accessories or any modification may affect your vehicle's handling, stability, Safety and Overall performance. Furthermore in extreme case such modification / alteration (especially in wire harness), may cause Fire Hazard and unintended control over your vehicle while driving, such sitaution may lead to an accident which may cause fatal or serious injuries.
Installation of Improper / Non-Genuine accessories Modification of your vehicle may even violate or no longer meet the governmental safety and emissions regulations.

In addition, damage or performance problems resulting from Installation of Improper / Non-Genuine accessories or modifications may not be covered under warranty.

For further detail please contact your Kia Dealership

VEHICLE BREAK-IN PROCESS

No special break-in period is needed. By following a few simple precautions for the first 1,000 km (600 miles) you may add to the performance, economy and life of your vehicle.

- Do not race the engine.
- Whilst driving, keep your engine speed (rpm, or revolutions per minute) within 3,000 rpm.
- Do not maintain a single speed for long periods of time, either fast or slow. Varying engine speed is needed to properly break-in the engine.
- Avoid hard stops, except in emergencies, to allow the brakes to seat properly.
- Don't tow a trailer during the first 2,000 km (1,200 miles) of operation.

VEHICLE HANDLING INSTRUCTIONS

As with other vehicles of this type, failure to operate this vehicle correctly may result in loss of control, an accident or vehicle rollover.

Specific design characteristics (higher ground clearance, track, etc.) give this vehicle a higher centre of gravity than other types of vehicles. In other words they are not designed for cornering at the same speeds as conventional 2-wheel drive vehicles. Avoid sharp turns or abrupt manoeuvre. Again, failure to operate this vehicle correctly may result in loss of control, an accident or vehicle rollover. **Be sure to read the "Reducing the risk of a rollover" driving guidelines, in chapter 6 of this manual.**

Your vehicle at a glance

Exterior overview 2-2
Interior overview 2-4
Instrument panel overview 2-5
Engine compartment 2-6

EXTERIOR OVERVIEW

■ Front view



1. Bonnet 4-36
2. Head lamp operation 4-104
Head lamp replacement 8-87
3. Fog lamp operation 4-109
Fog lamp replacement 8-87
4. Wheel and tyre 8-42
Wheel and tyre specification 9-5
5. Outside rearview mirror 4-50
6. Panorama sunroof 4-40
7. Front windscreen wiper blades operation 4-114
Blade inspection 8-34
8. Windows 4-31
9. Parking distance warning 4-93

❊ The actual shape may differ from the illustration.

OUM018001R

■ Rear view



10. Door locks 4-14
11. Fuel filler door 4-38
12. Rear combination lamp 8-80
13. High mounted stop lamp 8-81
14. Rear window wiper blade operation ..4-114
    Rear window wiper blade inspection...8-37
15. Tailgate 4-17
16. Rearview camera 4-102
17. Parking distance warning-reverse 4-97
    Parking distance warning 4-102
18. License plate lamp 8-81

❊ The actual shape may differ from the illustration.

OUM018008

INTERIOR OVERVIEW



1. Inside door handle.....4-15
2. Power window switch 4-32
3. Central door lock switch 4-16
4. Power window lock button 4-35
5. Outside rearview mirror control.....4-51
6. Outside rearview mirror folding 4-51
7. Headlight levelling device.....4-110
8. Instrument panel illumination control 4-54
9. ESC off button.....6-40
10. DBC On/Off button 6-48
11. Power tailgate open/close button 4-20
12. Fuel filler door open button 4-38
13. Inner fuse panel 8-55
14. Tilt and telescopic steering control lever.....4-46
15. Steering wheel 4-45
16. Brake pedal 6-22
17. Bonnet release lever 4-36
18. Seat.....3-2

❉ The actual shape may differ from the illustration.

OUM018003R

INSTRUMENT PANEL OVERVIEW

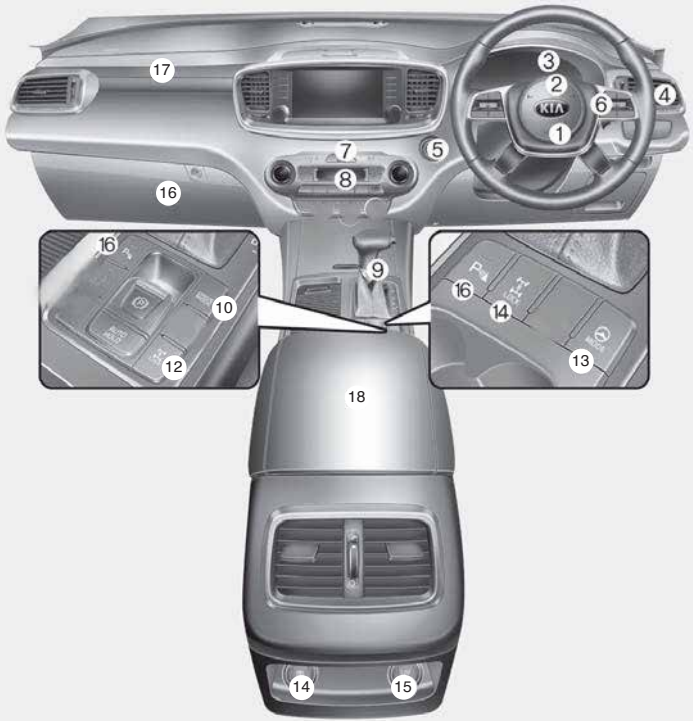

1. Driver's front air bag 3-57
2. Horn.....4-46
3. Instrument cluster.....4-53
4. Wiper and washer control lever 4-114
   Light control lever 4-103
5. Ignition switch or
   Engine start/stop button 6-6
6. Cruise control 6-51
   Manual Speed Limit Assist.....6-56
  6-93
7. Hazard warning flasher 7-2
8. Auto Climate control system 4-125
9. Shift lever-A/T 6-11
10. Drive mode button 6-59
11. AWD Lock button.....6-19
12. Parking Distance Warning system
    On/Off button 4-97
13. FLEX steer button 4-47
14. USB charger.....4-147
15. Power outlet.....4-147
16. Glove box 4-122
17. Passenger's front air bag 3-37
18. Centre console storage box 4-141

❊ The actual shape may differ from the illustration.

OUM018004R

ENGINE COMPARTMENT

■ **Petrol Engine (Theta II 2.4L) - MPI**

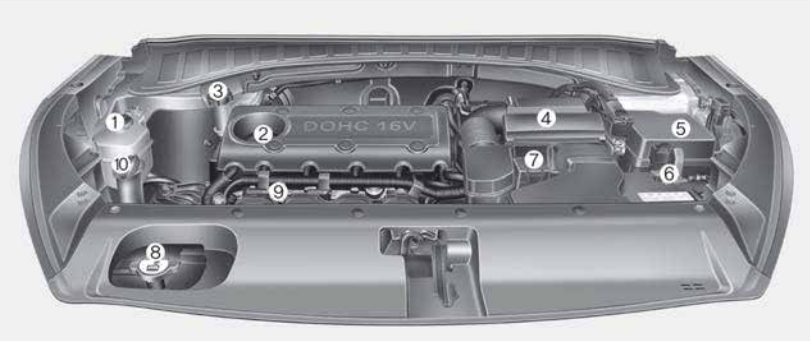

1. Engine coolant reservoir.....8-25
2. Engine oil filler cap 8-23
3. Brake/clutch fluid reservoir 8-28
4. Air cleaner.....8-30
5. Fuse box 8-53
6. Negative battery terminal.....8-38
7. Positive battery terminal 8-38
8. Radiator cap 8-27
9. Engine oil dipstick.....8-45, 23
10. Windscreen washer fluid reservoir..8-27

❈ The actual engine room in the vehicle may differ from the illustration.

■ **Petrol Engine (Lambda II 3.5L) - MPI**

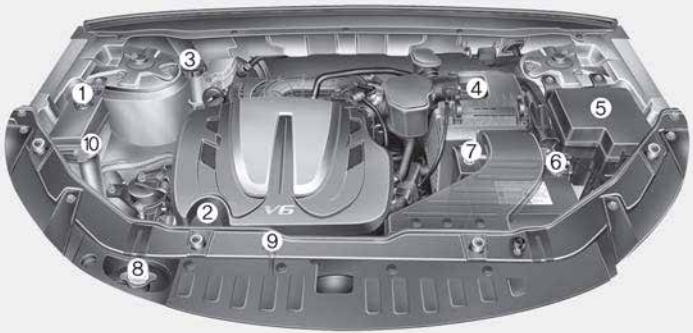

1. Engine coolant reservoir.....8-25
2. Engine oil filler cap.....8-23
3. Brake/clutch fluid reservoir 8-28
4. Air cleaner.....8-30
5. Fuse box.....8-53
6. Negative battery terminal.....8-38
7. Positive battery terminal 8-38
8. Radiator cap 8-27
9. Engine oil dipstick.....8-45, 23
10. Windscreen washer fluid reservoir..8-27

❈ The actual engine room in the vehicle may differ from the illustration.

OUM076105R/OUM078001R

Safety features of your vehicle

Seats 3-2
- Front seat adjustment - manual. 3-6
- Front seat adjustment - power. 3-7
- Headrest (for front seat) 3-11
- Seatback pocket. 3-13
- Rear seat adjustment 3-13
- Headrest (for rear seat). 3-21

Seat belts 3-24
- Seat belt restraint system 3-24
- Pre-tensioner seat belt. 3-31
- Seat belt precautions. 3-34
- Care of seat belts 3-36

Child restraint system 3-38
- Using a child restraint system 3-40

Air bag - supplemental restraint system 3-50
- How does the air bag system operate 3-51
- Air bag warning light 3-54
- SRS components and functions 3-55
- Driver's and passenger's front air bag 3-57
- Side air bag 3-60
- Curtain air bag 3-62
- Inflation and non-inflation conditions of the air bag. . 3-66
- SRS Care 3-69
- Additional safety precautions. 3-81
- Air bag warning label 3-83

SEATS

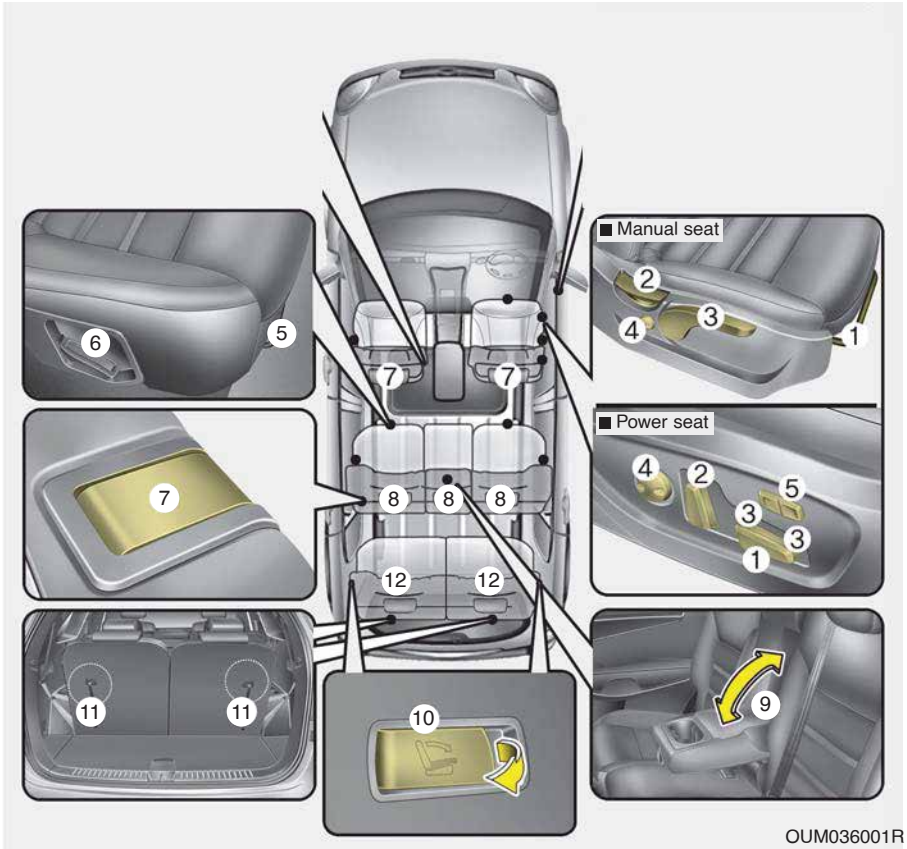

Front seat

(1) Forward and backward
(2) Seatback angle
(3) Seat cushion height*
(4) Lumbar support*

2nd row seat

(5) Forward and backward
(6) Seatback angle and folding
(7) Walk-in seat lever*
(8) Headrest
(9) Armrest
(10) Remote folding*

3rd row seat*

(11) Seatback folding
(12) Headrest

* : if equipped

⚠ WARNING - Loose objects

Loose objects in the driver's foot area could interfere with the operation of the foot pedals, possibly causing an accident. Do not place anything under the front seats.

⚠ WARNING - Uprighting seat

When you return the seatback to its upright position, hold the seatback and return it slowly and be sure there are no other occupants around the seat. If the seatback is returned without being held and controlled, the back of the seat could spring forward resulting in accidental injury to a person struck by the seatback.

⚠ WARNING - Driver responsibility for passengers

Riding in a vehicle with the seatback reclined could lead to serious or fatal injury in an accident. If a seat is reclined during an accident, the occupant's hips may slide under the lap portion of the seat belt applying great force to the unprotected abdomen. Serious or fatal internal injuries could result. The driver must advise the passenger to keep the seatback in an upright position whenever the vehicle is in motion.

⚠ WARNING

Do not use a sitting cushion that reduces friction between the seat and passenger. The passenger's hips may slide under the lap portion of the seat belt during an accident or a sudden stop. Serious or fatal internal injuries could result because the seat belt cannot operate normally.

⚠ WARNING - Driver's seat

- **Never attempt to adjust the seat whilst the vehicle is moving. This could result in loss of control, and an accident causing death, serious injury, or property damage.**

(Continued)

(Continued)

- Do not allow anything to interfere with the normal position of the seatback. Storing items against a seatback or in any other way interfering with proper locking of a seatback could result in serious or fatal injury in a sudden stop or collision.
- Always drive and ride with your seatback upright and the lap portion of the seat belt snug and low across the hips. This is the best position to protect you in case of an accident.
- In order to avoid unnecessary and perhaps severe air bag injuries, always sit as far back as possible from the steering wheel whilst maintaining comfortable control of the vehicle. We recommend that your chest be at least 25 cm (10 inches) away from the steering wheel.

⚠ WARNING - Rear seatbacks

- The rear seatback must be securely latched. If not, passengers and objects could be thrown forward resulting in serious injury or death in the event of a sudden stop or collision.
- Luggage and other cargo should be laid flat in the cargo area. If objects are large, heavy, or must be piled, they must be secured.

  Under no circumstances should cargo be piled higher than the seatbacks. Failure to follow these warnings could result in serious injury or death in the event of a sudden stop, collision or rollover.

(Continued)

(Continued)

- No passenger should ride in the cargo area or sit or lie on folded seatbacks whilst the vehicle is moving. All passengers must be properly seated in seats and restrained properly whilst riding.
- When resetting the seatback to the upright position, make sure it is securely latched by pushing it forward and backwards.
- To avoid the possibility of burns, do not remove the carpet in the cargo area.

  Emission control devices beneath this floor generate high temperatures.

⚠ WARNING

After adjusting the seat, always check that it is securely locked into place by attempting to move the seat forward or backward without using the lock release lever. Sudden or unexpected movement of the driver's seat could cause you to lose control of the vehicle resulting in an accident.

⚠ WARNING

- **Do not adjust the seat whilst wearing seat belts. Moving the seat cushion forward may cause strong pressure on the abdomen.**
- **Use extreme caution so that hands or other objects are not caught in the seat mechanisms whilst the seat is moving.**
- **Do not put a cigarette lighter on the floor or seat. When you operate the seat, gas may gush out of the lighter and cause fire.**
- **If there are occupants in the rear seats, be careful whilst adjusting the front seat position.**
- **Use extreme caution when picking small objects trapped under the seats or between the seat and the centre console. Your hands might be cut or injured by the sharp edges of the seat mechanism.**

Feature of Seat Leather

- Leather is made from the outer skin of an animal, which goes through a special process to be available for use. Since it is a natural substance, each part differs in thickness or density.

  Wrinkles may appear as a natural result of stretching and shrinking depending on the temperature and humidity.
- The seat cover is made of stretchable material to improve comfort of passengers.
- The parts contacting the body are curved and the side supporting area is high which provides driving comfort and stability.
- Wrinkles may appear naturally from usage. It is not a fault of the product.

⚠ CAUTION

- ***Wrinkles or abrasions which appear naturally from usage are not covered by warranty.***
- ***Belts with metallic accessories, zippers or keys inside the back pocket may damage the seat fabric.***
- ***Make sure not to wet the seat. It may change the nature of natural leather.***
- ***Jeans or clothes which could bleach may contaminate the surface of the seat covering fabric.***

Front seat adjustment - manual

Forward and backward


OUM038002R

To move the seat forward or backward:

1. Pull the seat slide adjustment lever up and hold it.
2. Slide the seat to the position you desire.
3. Release the lever and make sure the seat is locked in place.

Adjust the seat before driving, and make sure the seat is locked securely by trying to move forward and backward without using the lever. If the seat moves, it is not locked properly.

Seatback angle

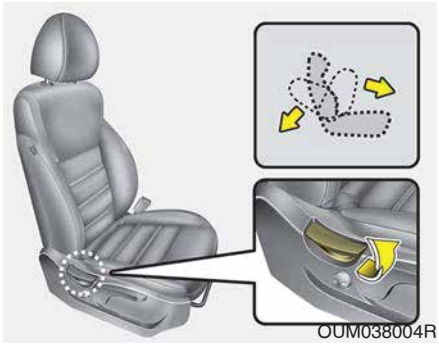
OUM038004R

To recline the seatback:

1. Lean forward slightly and lift up the seatback recline lever.
2. Carefully lean back on the seat and adjust the seatback of the seat to the position you desire.
3. Release the lever and make sure the seatback is locked in place. (The lever MUST return to its original position for the seatback to lock.)

Seat height (if equipped)

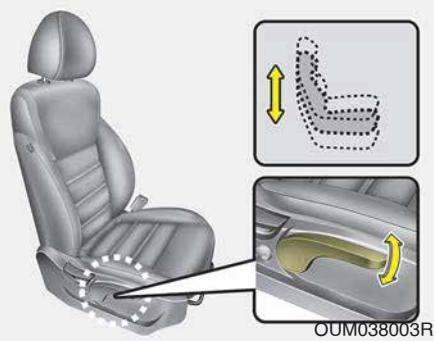

To change the height of the seat, push the lever upwards or downwards.

- To lower the seat cushion, push the lever down several times.
- To raise the seat cushion, pull the lever up several times.

Lumbar support (if equipped) (for driver's seat)



The lumbar support can be adjusted by pressing the lumbar support switch on the side of the seat.

1. Press the front portion of the switch to increase support, or the rear portion of the switch, to decrease support.
2. Release the switch once it reaches the desired position.

Front seat adjustment - power (if equipped)

The front seat can be adjusted by using the control switches located on the outside of the seat cushion. Before driving, adjust the seat to the proper position so you can easily control the steering wheel, pedals and switches on the instrument panel.

⚠ WARNING

The power seat is operable with the ignition OFF.

Therefore, children should never be left unattended in the vehicle.

⚠ CAUTION

- ***The power seat is driven by an electric motor. Stop operating once the adjustment is completed. Excessive operation may damage the electrical equipment.***
- ***When in operation, the power seat consumes a large amount of electrical power. To prevent unnecessary charging system drain, don't adjust the power seat longer than necessary whilst the engine is not running.***
- ***Do not operate two or more power seat control switches at the same time. Doing so may result in power seat motor or electrical component malfunction.***

Forward and backward



Push the control switch forward or backward to move the seat to the desired position. Release the switch once the seat reaches the desired position.

Seatback angle

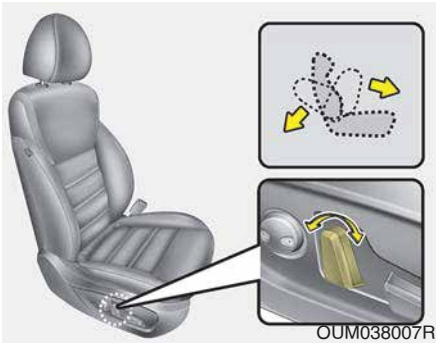

Push the control switch forward or backward to move the seatback to the desired angle. Release the switch once the seat reaches the desired position.

Seat height (if equipped)

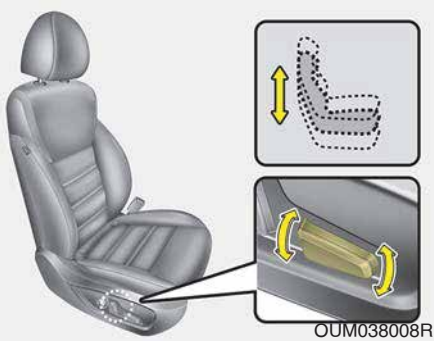

Pull the front portion of the control switch up to raise or press down to lower the front part of the seat cushion. Pull the rear portion of the control switch up to raise or press down to lower the rear part of the seat cushion. Release the switch once the seat reaches the desired position.

Lumbar support (if equipped)

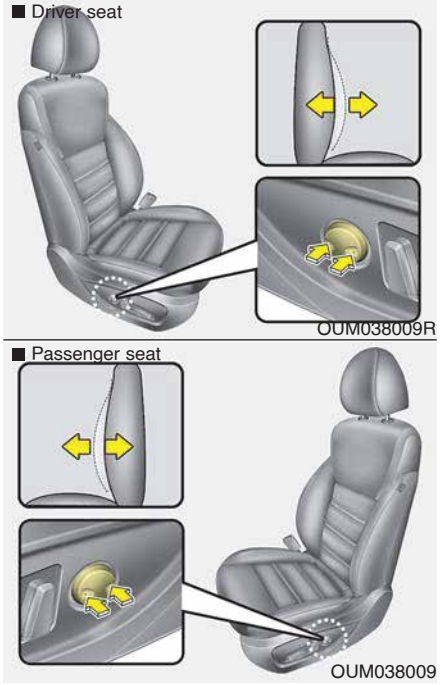

The lumbar support can be adjusted by pressing the lumbar support switch on the side of the seat.

Type A (for Driver and Passenger seat)

1. Press the front portion of the switch to increase support, or the rear portion of the switch, to decrease support.
2. Release the switch once it reaches the desired position.

■ Driver seat

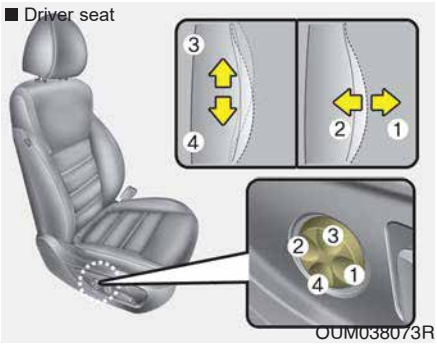

OUM038073R

Type B (for Driver seat)

1. Press the front portion (1) of the switch to increase support, or the rear portion (2) of the switch, to decrease support.
2. Release the switch once it reaches the desired position.
3. Press the upper portion (3) of the switch to move the support position up, or press the lower portion (4) of the switch, to move the support position down.
4. Release the switch once it reaches the desired position.

Headrest (for front seat)

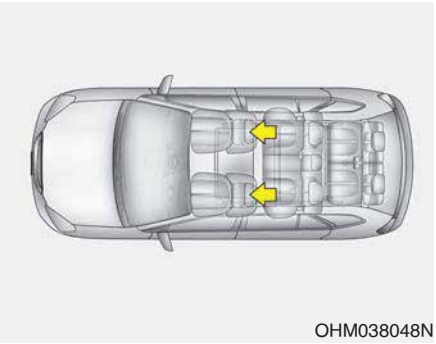

OHM038048N

The driver's and front passenger's seats are equipped with a headrest for the occupant's safety and comfort.

The headrest not only provides comfort for the driver and front passenger, but also helps protect the head and neck in the event of a collision.

⚠ WARNING

- **For maximum effectiveness in case of an accident, the headrest should be adjusted so the middle of the headrest is at the same height of the centre of gravity of an occupant's head. Generally, the centre of gravity of most people's head is similar with the height of the top of their eyes. Also, adjust the headrest as close to your head as possible. For this reason, the use of a cushion that holds the body away from the seatback is not recommended.**
- **Do not operate the vehicle with the headrests removed. Severe injury to the occupants may occur in the event of an accident. Headrests may provide protection against neck injuries when properly adjusted.**
- **Do not adjust the headrest position of the driver's seat whilst the vehicle is in motion.**

Adjusting the height up and down

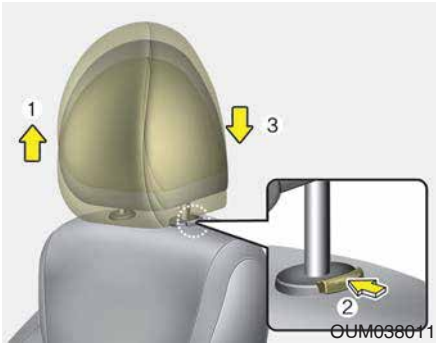

To raise the headrest, pull it up to the desired position (1). To lower the headrest, push and hold the release button (2) and lower the headrest to the desired position (3).

Forward and backward adjustment (if equipped)

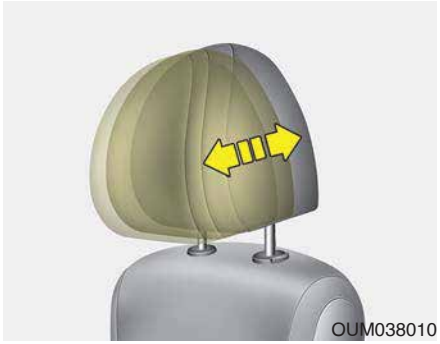

The headrest may be adjusted forward to 4 different positions by pulling the headrest forward to the desired detent.

To adjust the headrest to it's furthest backwards position, pull the headrest fully forward to the farthest position and release it. Adjust the headrest so that it properly supports the head and neck.

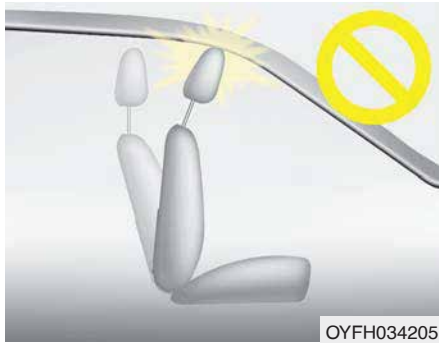

⚠ CAUTION

If you recline the seatback towards the front with the headrest and seat cushion raised, the headrest may come in contact with the sunvisor or other parts of the vehicle.

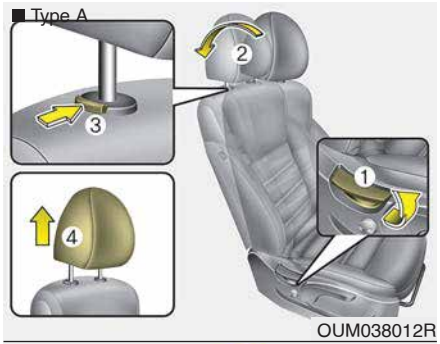

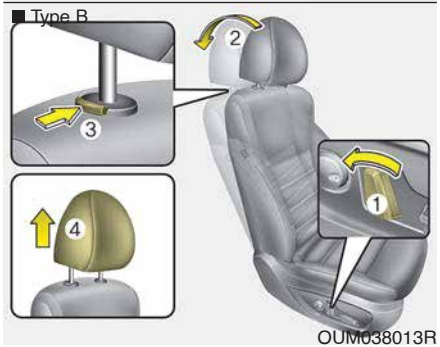

Removal/Reinstall

To remove the headrest:

1. Recline the seatback (2) with the recline lever or switch (1).
2. Raise headrest as far as it can go.
3. Press the headrest release button (3) whilst pulling the headrest up (4).

⚠ WARNING

NEVER allow anyone to ride in a seat with the headrest removed.

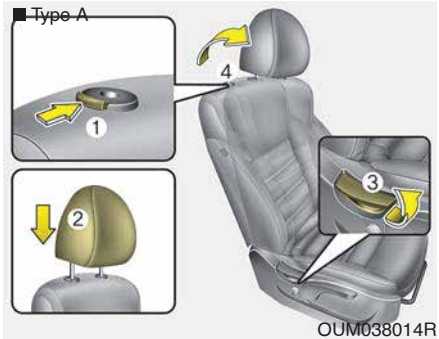

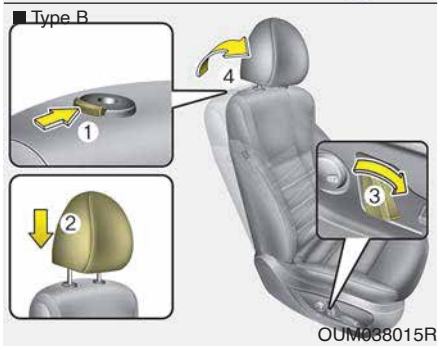

To reinstall the headrest:

1. Put the headrest poles (2) into the holes whilst pressing the release button or switch (1).
2. Recline the seatback(4) with the recline lever or switch (3).
3. Adjust the headrest to the appropriate height.

⚠ WARNING

Always make sure the headrest locks into position after reinstalling and adjusting it properly.

Seatback pocket

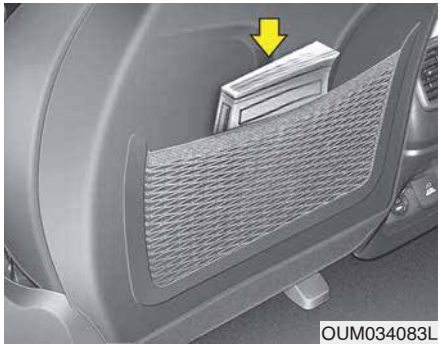

The seatback pocket is provided on the back of the front passenger's and driver's seatbacks.

⚠ WARNING - Seatback pockets

Do not put heavy or sharp objects in the seatback pockets. In an accident they could come loose from the pocket and injure vehicle occupants.

Rear seat adjustment

Forward and backward (2nd row seat)



To move the seat forward or backward:

1. Pull the seat slide adjustment lever up and hold it.
2. Slide the seat to the position you desire.
3. Release the lever and make sure the seat is locked in place.

Adjust the seat before driving, and make sure the seat is locked securely by trying to move forward and backward without using the lever. If the seat moves, it is not locked properly.

Seatback angle (2nd row seat)

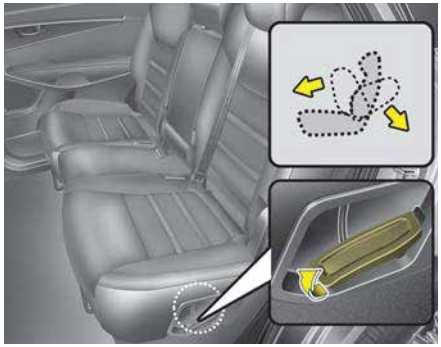

To recline the seatback:

1. Pull up the seatback recline lever.
2. Hold the lever and adjust the seatback of the seat to the position you desire.
3. Release the lever and make sure the seatback is locked in place. (The lever MUST return to its original position for the seatback to lock.)

Walk-in seat (2nd row seat, for 7 passenger vehicle)



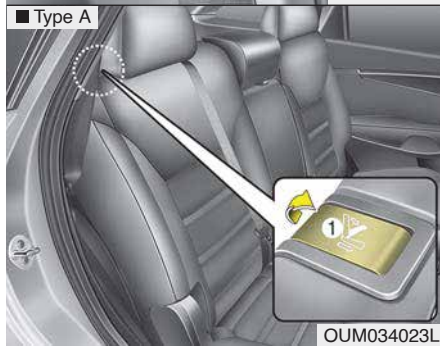

■ Type B

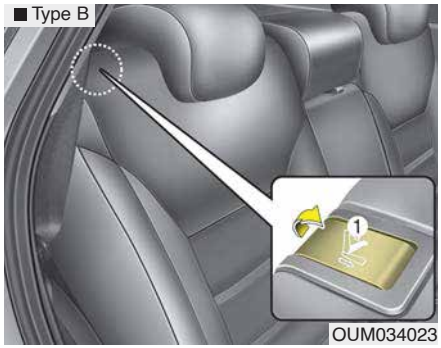

To get in or out of the 3rd row seat:

1. Routing the seat belt webbing through the rear seat belt guide clip. After inserting the seat belt, tighten the belt webbing by pulling it up.
2. Pull up the walk-in lever (1) on the 2nd row seatback.

■ Type A

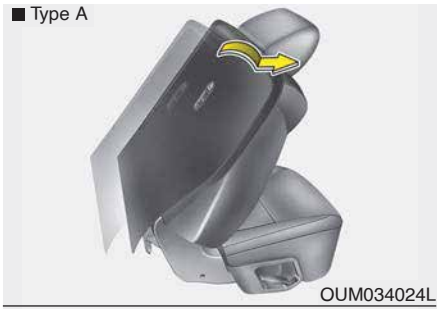

■ Type B



3. The 2nd row seatback will be folded and push the seat to the farthest forward position.

   After getting in or out, slide the 2nd row seat to the farthest rearward position and pull the seatback firmly backward until it clicks into place. Make sure that the seat is locked in place.

⚠ WARNING

Never attempt to adjust whilst the vehicle is moving or the 2nd row seat is occupied as the seat may suddenly move and cause the passenger on the seat to be injured.

Folding the rear seat

The rear seatbacks can be folded to facilitate carrying long items or to increase the luggage capacity of the vehicle.

⚠ WARNING

The purpose of the fold-down rear seatbacks is to allow you to carry longer objects that could not be accommodated in the cargo area.

Never allow passengers to sit on top of the folded down seatback whilst the vehicle is moving. This is not a proper seating position and no seat belts are available for use. This could result in serious injury or death in case of an accident or sudden stop. Objects carried on the folded down seatback should not extend higher than the top of the front seatbacks. This could allow cargo to slide forward and cause injury or damage during sudden stops.

■ 2nd row seat

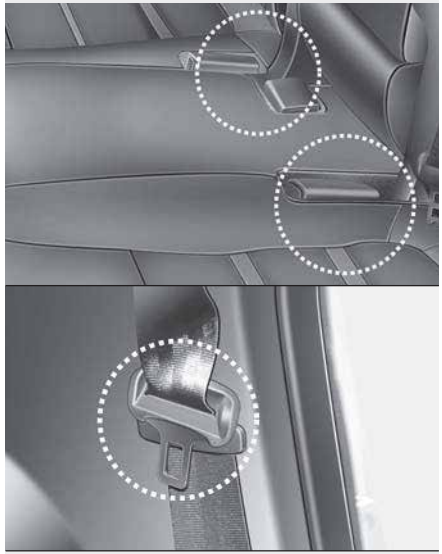

■ 2nd row centre seat (if equipped)

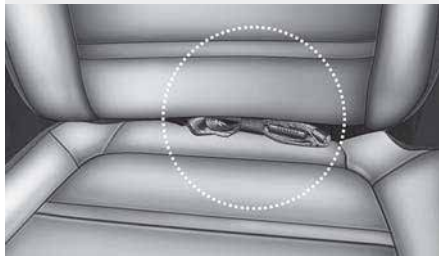

OUM034036/OUM034022/OUM034089L

3rd row seat (if equipped)

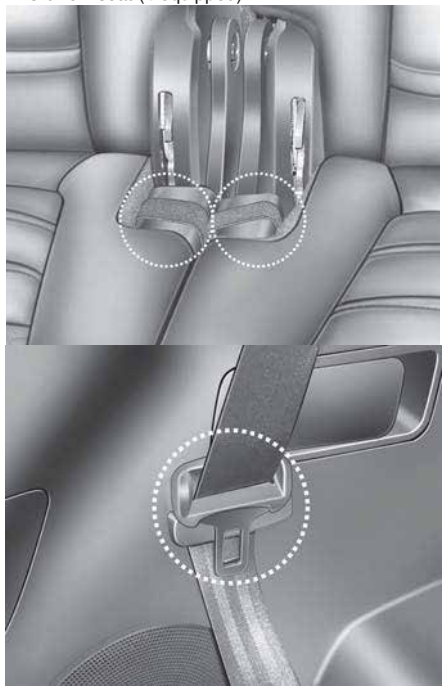

OUM034037/OUM034035

To fold down the rear seatback

1. Insert the rear seat belt buckle in the pocket between the rear seatback and cushion, and insert the rear seat belt webbing in the guide to prevent the seat belt from being damaged.
2. Set the front seatback to the upright position and if necessary, slide the front seat forward.
3. Lower the rear headrests to the lowest position.

■ 2nd row seat

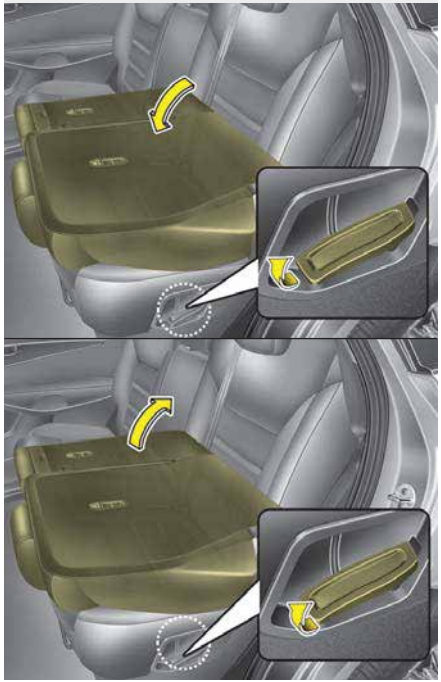

OUM034025/OUM034026

■ 3rd row seat (if equipped)



OUM034027/OUM034028

4. Pull on the seatback folding lever (for 2nd row) or strap (for 3rd row), then fold the seat toward the front of the vehicle. When you return the seatback to its upright position, always be sure it has locked into position by pushing on the top of the seatback.
5. To use the rear seat, lift and pull the seatback backward by pulling on the folding lever (for 2nd row) or strap (for 3rd row).

   Pull the seatback firmly until it clicks into place.

   Make sure the seatback is locked in place.
6. Return the rear seat belt to the proper position.

2nd row seat folding (from outside, if equipped)

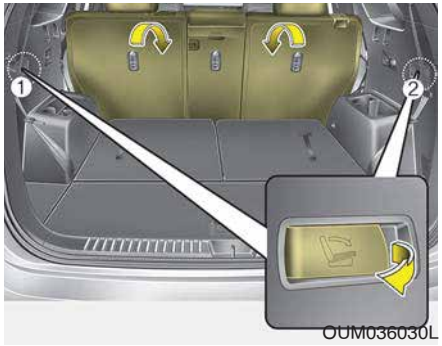

Pull the 2nd row seat back folding lever out.

The 2nd row seat back will be folded.

If you pull the left side lever (1) out, left side seat back and centre seat back will be folded.

If you pull the right side lever (2) out, right side seat back will be folded.

⚠ WARNING - Rear seat folding

Do not fold the rear seats (2nd & 3rd row seats), if passengers, pets or luggage are in the rear seats.

It may cause injury or damage to passengers, pets, luggage.

To fold down the rear centre seat-back (for 2nd row seat)



1. Lower the rear headrests to the lowest position.
2. Push the centre seatback folding lever up, then fold the seat toward the front of the vehicle.

When you return the seatback to its upright position, always be sure it has locked into position by pushing on the top of the seatback.

⚠ WARNING - 2nd row centre seat folding

- **Do not fold the 2nd row centre seat, if the occupants in the 3rd row seats, It may cause the injury to occupants by the seat device.**

  If occupants in the 3rd row seats, Fix the upright position of the 2nd row centre seat.
- **The 2nd row centre seat back does not fix when it is folded. If you use the 2nd row centre seat back folding function to carry long objects, you should fix the long object to prevent it from being thrown about the vehicle in a collision and causing injury to vehicle occupants.**

⚠ WARNING - Uprighting seat

When you return the seatback to its upright position, hold the seatback and return it slowly. If the seatback is returned without holding it, the back of the seat could spring forward resulting in injury caused by being struck by the seatback.

⚠ CAUTION - Damaging rear seat belt buckles

When you fold the rear (2nd and/or 3rd row) seatback, insert the buckle in the pocket between the rear seatback and cushion. Doing so can prevent the buckle from being damaged by the rear seatback.

⚠ CAUTION - Rear seat belts

When returning the rear (2nd and/or 3rd row) seatbacks to the upright position, remember to return the rear shoulder belts to their proper position. Routing the seat belt webbing through the rear seat belt guides will help keep the belts from being trapped behind or under the seats.

⚠ WARNING - Cargo

Cargo should always be secured to prevent it from being thrown about the vehicle in a collision and causing injury to the vehicle occupants. Do not place objects in the rear (2nd and/or 3rd row) seats, since they cannot be properly secured and may hit the front seat occupants in a collision.

⚠ WARNING - Cargo loading

Make sure the engine is off, the automatic transaxle is in P (Park) or the manual transaxle is in R (Reverse) or 1st, and the parking brake is securely applied whenever loading or unloading cargo. Failure to take these steps may allow the vehicle to move if the shift lever is inadvertently moved to another position.

Armrest (2nd row seat)

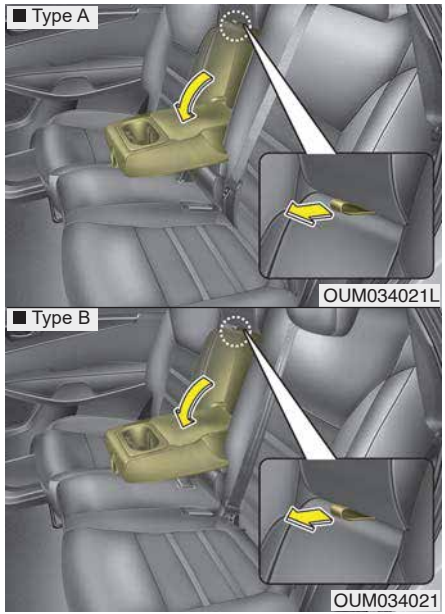

To use the armrest, pull it forward from the seatback.

Headrest (for rear seat)

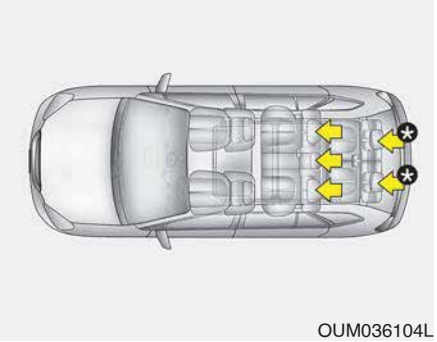

OUM036104L

* : if equipped

The rear seat(s) is equipped with headrests in all the seating positions for the occupant's safety and comfort.

The headrest not only provides comfort for passengers, but also helps protect the head and neck in the event of a collision.

⚠ WARNING

- **For maximum effectiveness in case of an accident, the headrest should be adjusted so the middle of the headrest is at the same height of the centre of gravity of an occupant's head. Generally, the centre of gravity of most people's head is similar with the height of the top of their eyes. Also adjust the headrest as close to your head as possible. For this reason, the use of a cushion that holds the body away from the seatback is not recommended.**
- **Do not operate the vehicle with the headrests removed. Severe injury to an occupant may occur in the event of an accident. Headrests may provide protection against severe neck injuries when properly adjusted.**

⚠ CAUTION

When there is no occupant in the rear seats, adjust the height of the headrest to the lowest position. The rear seat headrest can reduce the visibility of the rear area.

Adjusting the height up and down (2nd and 3rd row seat)

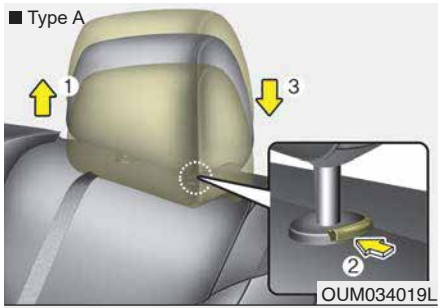

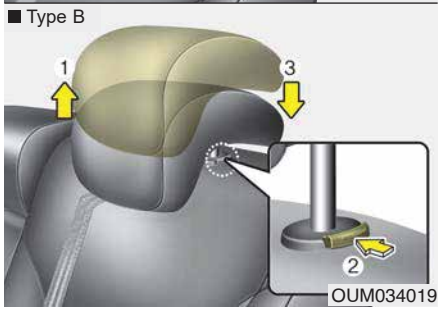

To raise the headrest, pull it up to the desired position (1). To lower the headrest, push and hold the release button (2) on the headrest support and lower the headrest to the desired position (3).

Removal (2nd and 3rd row seat)

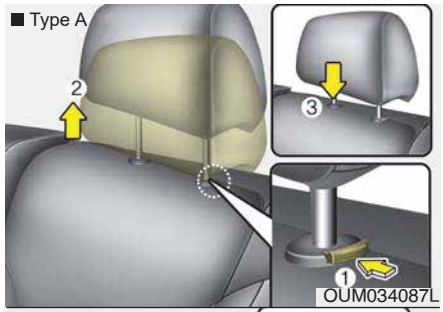

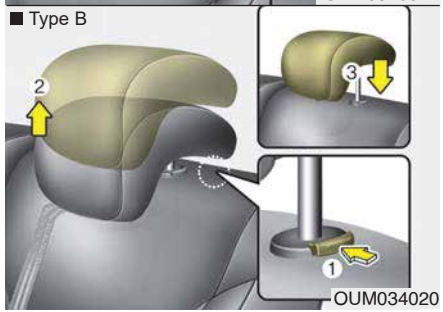

To remove the headrest, raise it as far as it can go then press the release button (1) whilst pulling the headrest up (2).

To reinstall the headrest, put the headrest poles (3) into the holes whilst pressing the release button (1). Then adjust it to the appropriate height.

⚠ WARNING

Make sure the headrest locks in position after adjusting it to properly protect the occupants.

3rd row headrest (if equipped)

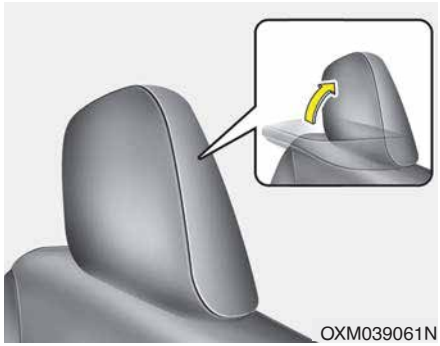

The headrest will fold down automatically when the seatback folding.

Always be sure the headrest has locked into position after you return the seatback.

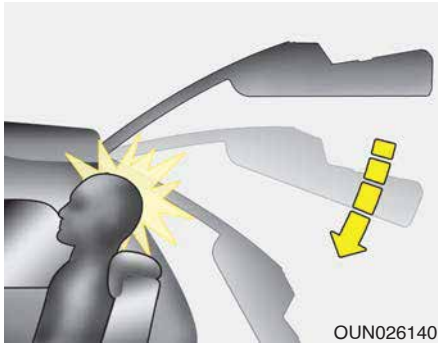

⚠ WARNING

If the tailgate is pushed down to close it when a passenger's head is not against a properly adjusted headrest or a tall person is seated, the tailgate may hit the occupant's head, which could cause injury.

SEAT BELTS

Seat belt restraint system

⚠ WARNING

- **For maximum restraint system protection, the seat belts must always be used whenever the vehicle is moving.**
- **Seat belts are most effective when seatbacks are in the upright position.**
- **Children age 13 and under must always be properly restrained in the rear seat. Never allow children to ride in the front passenger seat. If a child over 13 must be seated in the front seat, he/she must be properly belted and the seat should be moved as far back as possible.**
- **Never wear the shoulder belt under your arm or behind your back. An improperly positioned shoulder belt can cause serious injuries in a crash.**

(Continued)

(Continued)

The shoulder belt should be positioned midway over your shoulder across your collarbone.

- **Never wear a seat belt over fragile objects. If there is a sudden stop or impact, the seat belt can damage it.**
- **Avoid wearing twisted seat belts. A twisted belt can't do its job well. In a collision, it could even cut into you. Be sure the belt webbing is straight and not twisted.**
- **Be careful not to damage the belt webbing or hardware. If the belt webbing or hardware is damaged, replace it.**

Seat belt warning

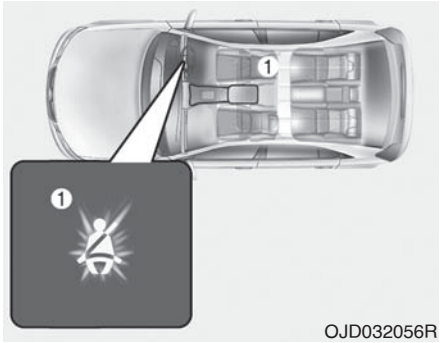

Driver's seat belt warning (1)

As a reminder to the driver, the seat belt warning light will illuminate for approximately 6 seconds each time you turn the ignition switch ON regardless of belt fastening.

If the driver's seat belt is unfastened after the ignition switch is ON, the seat belt warning light illuminates until the belt is fastened.

If you continue not to fasten the seat belt and you drive over 9km/h, the illuminated warning light will start to blink until you drive under 9km/h. (if equipped)

If you continue not to fasten the seat belt and you drive over 20km/h the seat belt warning chime will sound for approximately 100 seconds and the corresponding warning light will blink. (if equipped)

Lap/shoulder belt

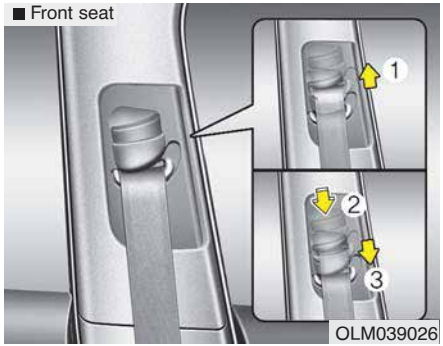

Height adjustment

You can adjust the height of the shoulder belt anchor to one of 4 positions for maximum comfort and safety.

The height of the adjusting seat belt should not be too close to your neck. You will not be getting the most effective protection. The shoulder portion should be adjusted so that it lies across your chest and midway over your shoulder near the door and not your neck.

To adjust the height of the seat belt anchor, lower or raise the height adjuster into an appropriate position.

To raise the height adjuster, pull it up (1). To lower it, push it down (3) whilst pressing the height adjuster button (2).

Release the button to lock the anchor into position. Try sliding the height adjuster to make sure that it has locked into position.

Improperly positioned seat belts can cause serious injuries in an accident.

⚠ WARNING

- **Verify the shoulder belt anchor is locked into position at the appropriate height. Never position the shoulder belt across your neck or face.**
- **Failure to replace seat belts after an accident could leave you with damaged seat belts that will not provide protection in the event of another collision leading to personal injury or death. Replace your seat belts after being in an accident as soon as possible.**

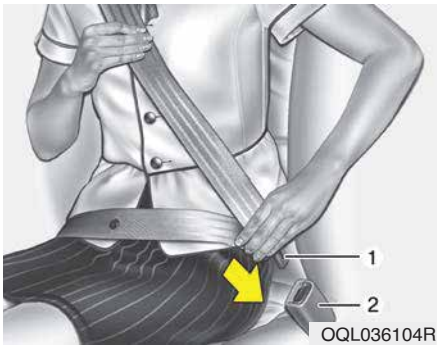

To fasten your seat belt:

To fasten your seat belt, pull it out of the retractor and insert the metal tab (1) into the buckle (2). There will be an audible "click" when the tab locks into the buckle.

The seat belt automatically adjusts to the proper length only after the lap belt portion is adjusted manually so that it fits snugly around your hips. If you lean forward in a slow, easy motion, the belt will extend and let you move around. If there is a sudden stop or impact, however, the belt will lock into position. It will also lock if you try to lean forward too quickly.

✻ NOTICE

If you are not able to pull out the seat belt from the retractor, firmly pull the belt out and release it. Then you will be able to pull the belt out smoothly.



⚠ WARNING

You should place the lap belt portion as low as possible and snugly across your hips, not on your waist. If the lap belt is located too high on your waist, it may increase the chance of injury in the event of a collision. Both arms should not be under or over the belt. Rather, one should be over and the other under, as shown in the illustration.

Never wear the seat belt under the arm near the door.

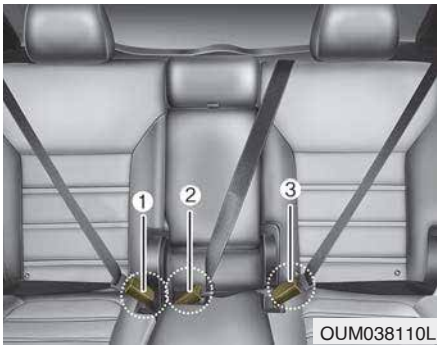

The seat belt should be locked into the buckle on each seat cushion to be properly fastened.

① : Rear right seat belt fastening buckle

② : Rear centre seat belt fastening buckle

③ : Rear left seat belt fastening buckle

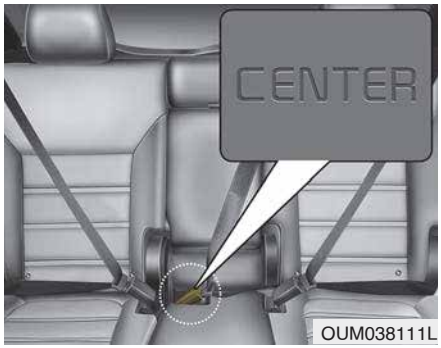

When using the rear centre seat belt, the buckle with the “CENTER” mark must be used.

⚠ CAUTION

Do not force to lock the left or right seat belt into the centre seat belt buckle.

Make sure to lock the rear ceter seat belt into the centre seat belt buckle.

If not, the improperly fastened seat belt will not be able to provide protection.



To release the seat belt:

The seat belt is released by pressing the release button (A) in the locking buckle. When it is released, the belt should automatically draw back into the retractor.

If this does not happen, check the belt to be sure it is not twisted, then try again.

Lap belt (if equipped)



To fasten your seat belt:

To fasten a 2-point static type belt, insert the metal tab (1) into the locking buckle (2). There will be an audible "click" when the tab locks into the buckle. Check to make sure the belt is properly locked and that the belt is not twisted.

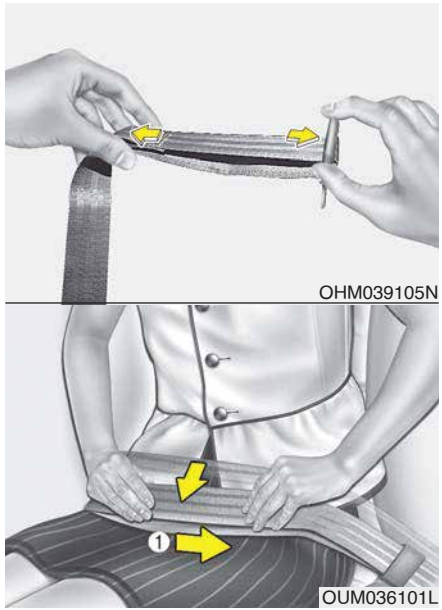

With a 2-point static type seat belt, the length must be adjusted manually so it fits snugly around your body. Fasten the belt and pull on the loose end to tighten. The belt should be placed as low as possible on your hips (1), not on your waist. If the belt is too high, it could increase the possibility of your being injured in an accident.

When using the rear centre seat belt, the buckle with the “CENTER” mark must be used.

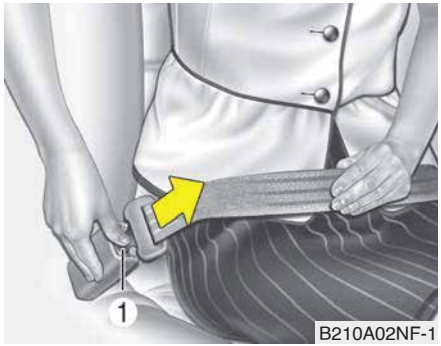

To release the seat belt:

When you want to release the seat belt, press the button (1) in the locking buckle.

⚠ WARNING

The centre lap belt latching mechanism is different from those for the rear seat shoulder belts. When fastening the rear seat shoulder belts or the centre lap belt, make sure they are inserted into the correct buckles to obtain maximum protection from the seat belt system and assure proper operation.

Stowing the rear seat belt

■ 2nd row seat

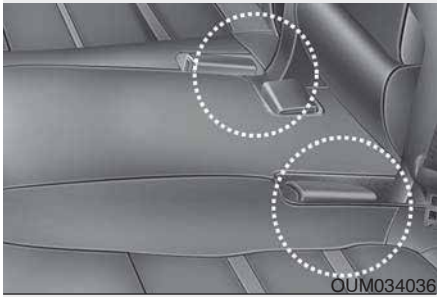

■ 3rd row seat (if equipped)

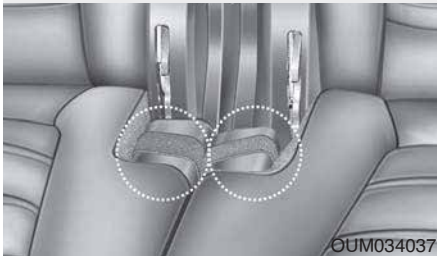

- The rear seat belt buckles can be stowed in the pocket between the rear seatback and cushion when not in use.
- The centre seat belt can be stowed with the plate and webbing rolled in the pocket between the rear seatback and cushion.

■ 2nd row seat



■ 2nd row centre seat (if equipped)

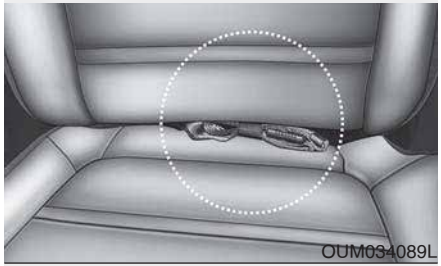

■ 3rd row seat (if equipped)



- Routing the seat belt webbing through the rear seat belt guides will help keep the belts from being trapped behind or under the seats.

  After inserting the seat belt, tighten the belt webbing by pulling it up.

⚠ CAUTION

When using the seat belt, use it after taking it out of the guides.

If you pull the seat belt when it is stored in the guides, it may damage the guides and/or belt webbing.

Pre-tensioner seat belt (if equipped)



Your vehicle is equipped with driver's and front passenger's pre-tensioner seat belts (retractor pretensioner and EFD (Emergency Fastening Device)). The pre-tensioner seat belts can be activated, where the frontal collision is severe enough, together with the air bags.

When the vehicle stops suddenly, or if the occupant tries to lean forward too quickly, the seat belt retractor will lock into position. In certain frontal collisions, the pre-tensioner will activate and pull the seat belt into tighter contact against the occupant's body.

(1) Retractor Pretensioner

The purpose of the retractor pretensioner is to make sure that the shoulder belts fit in tightly against the occupant's upper body in certain frontal collisions.

(2) EFD (Emergency Fastening Device)

The purpose of the EFD is to make sure that the pelvis belts fit in tightly against the occupant's lower body in certain frontal collisions.

If the system senses excessive tension on the driver or passenger's seat belt when the pre-tensioner system activates, the load limiter inside the retractor pre-tensioner will release some of the pressure on the affected seat belt. (if equipped)

✻ NOTICE - if equipped with rollover sensor

The pre-tensioner will activate not only in a frontal collision but also in a side collision or rollover, if the vehicle is equipped with a side or curtain air bag.

✻ NOTICE - without rollover sensor

The pre-tensioner will activate not only in a frontal collision but also in a side collision, if the vehicle is equipped with a side or curtain air bag.

⚠ WARNING

For your safety, be sure that the belt webbing is not loose or twisted and always sit properly on your seat.

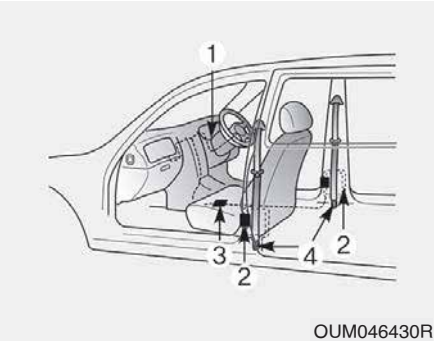

OUM046430R

The seat belt pre-tensioner system consists mainly of the following components. Their locations are shown in the illustration:

(1) SRS air bag warning light

(2) Retractor pre-tensioner assembly

(3) SRS control module

(4) Emergency fastening device (EFD)

⚠ WARNING

To obtain maximum benefit from a pre-tensioner seat belt:

1. **The seatbelt must be worn correctly and adjusted to the proper position. Please read and follow all of the important information and precautions about your vehicle's occupant safety features – including seat belts and air bags – that are provided in this manual.**
2. **Be sure you and your passengers always wear seat belts properly.**

✻ NOTICE

- **When the pre-tensioner seat belts are activated, a loud noise may be heard and fine dust, which may appear to be smoke, may be visible in the passenger compartment. These are normal operating conditions and are not hazardous.**
- **Although it is harmless, the fine dust may cause skin irritation and should not be breathed for prolonged periods. Wash all exposed skin areas thoroughly after an accident in which the pre-tensioner seat belts were activated.**
- **Because the sensor that activates the SRS air bag is connected with the pre-tensioner seat belt, the SRS air bag warning light on the instrument panel will illuminate for approximately 6 seconds after the ignition switch has been turned to the "ON" position, and then it should turn off.**

⚠ CAUTION

If the pre-tensioner seat belt is not working properly, the SRS air bag warning light will illuminate even if there is no malfunction of the SRS air bag. If the SRS air bag warning light does not illuminate when the ignition key is turned to ON, or if it remains illuminated after illuminating for approximately 6 seconds, or if it illuminates whilst the vehicle is being driven, have the system inspected by a professional workshop. Kia recommends to visit an authorised Kia dealer/service partner.

⚠ WARNING

- **Pre-tensioners are designed to operate only one time. After activation, pre-tensioner seat belts must be replaced. All seat belts, of any type, should always be replaced after they have been worn during a collision.**
- **The pre-tensioner seat belt assembly mechanisms become hot during activation. Do not touch the pre-tensioner seat belt assemblies for several minutes after they have been activated.**
- **Do not attempt to inspect or replace the pre-tensioner seat belts yourself. Have the system inspected by a professional workshop. Kia recommends to visit an authorised Kia dealer/service partner.**
- **Do not attempt to service or repair the pre-tensioner seat belt system in any manner.**

(Continued)

(Continued)

- **Improper handling of the pre-tensioner seat belt assemblies, and failure to heed the warnings not to strike, modify, inspect, replace, service or repair the pre-tensioner seat belt assemblies may lead to improper operation or inadvertent activation and serious injury.**
- **Always wear the seat belts when driving or riding in a motor vehicle.**
- **If the vehicle or pre-tensioner seat belt must be discarded, contact a professional workshop. Kia recommends to visit an authorised Kia dealer/service partner.**

⚠ CAUTION

Body work on the front area of the vehicle may damage the pre-tensioner seat belt system. Therefore, have the system serviced by a professional workshop. Kia recommends to visit an authorised Kia dealer/service partner.

Seat belt precautions

⚠ WARNING

All occupants of the vehicle must wear their seat belts at all times. Seat belts and child restraints reduce the risk of serious or fatal injuries for all occupants in the event of a collision or sudden stop. Without a seat belt, occupants could be shifted too close to a deploying air bag, strike the interior structure or be thrown from the vehicle. Properly worn seat belts greatly reduce these hazards.

Always follow the precautions about seat belts, air bags and occupant seating contained in this manual.

Infant or small child

You should be aware of the specific requirements in your country. Child and/or infant seats must be properly placed and installed in the rear seat. For more information about the use of these restraints, refer to “Child restraint system” in this section.

⚠ WARNING

Every person in your vehicle needs to be properly restrained at all times, including infants and children. Never hold a child in your arms or lap when riding in a vehicle. The violent forces created during a crash will tear the child from your arms and throw the child against the interior. Always use a child restraint appropriate for your child's height and weight.

✻ NOTICE

Small children are best protected from injury in an accident when properly restrained in the rear seat by a child restraint system that meets the requirements of the Safety Standards of your country. Before buying any child restraint system, make sure that it has a label certifying that it meets Safety Standards of your country. The restraint must be appropriate for your child's height and weight. Check the label on the child restraint for this information. Refer to “Child restraint system” in this section.

Seat belt precautions

⚠ WARNING

All occupants of the vehicle must wear their seat belts at all times. Seat belts and child restraints reduce the risk of serious or fatal injuries for all occupants in the event of a collision or sudden stop. Without a seat belt, occupants could be shifted too close to a deploying air bag, strike the interior structure or be thrown from the vehicle. Properly worn seat belts greatly reduce these hazards.

Always follow the precautions about seat belts, air bags and occupant seating contained in this manual.

Infant or small child

You should be aware of the specific requirements in your country. Child and/or infant seats must be properly placed and installed in the rear seat. For more information about the use of these restraints, refer to “Child restraint system” in this section.

⚠ WARNING

Every person in your vehicle needs to be properly restrained at all times, including infants and children. Never hold a child in your arms or lap when riding in a vehicle. The violent forces created during a crash will tear the child from your arms and throw the child against the interior. Always use a child restraint appropriate for your child's height and weight.

✻ NOTICE

Small children are best protected from injury in an accident when properly restrained in the rear seat by a child restraint system that meets the requirements of the Safety Standards of your country. Before buying any child restraint system, make sure that it has a label certifying that it meets Safety Standards of your country. The restraint must be appropriate for your child's height and weight. Check the label on the child restraint for this information. Refer to “Child restraint system” in this section.

Injured person

A seat belt should be used when an injured person is being transported. When this is necessary, you should consult a physician for recommendations.

One person per belt

Two people (including children) should never attempt to use a single seat belt. This could increase the severity of injuries in case of an accident.

Do not lie down

To reduce the chance of injuries in the event of an accident and to achieve maximum effectiveness of the restraint system, all passengers should be sitting up and the front and rear (2nd and/or 3rd row) seats should be in an upright position when the vehicle is moving. A seat belt cannot provide proper protection if the person is lying down in the rear seat or if the front and rear (2nd and/or 3rd row) seats are in a reclined position.

⚠ WARNING

Riding with a reclined seatback increases your chance of serious or fatal injuries in the event of a collision or sudden stop. The protection of your restraint system (seat belts and air bags) is greatly reduced by reclining your seat. Seat belts must be secured against your hips and chest to work properly. The more the seatback is reclined, the greater the chance an occupant's hips will slide under the lap belt causing serious internal injuries. Also, the shoulder belt may strike the occupant's neck. Drivers and passengers should always sit well back in their seats, properly belted, and with the seatbacks upright.

Care of seat belts

Seat belt systems should never be disassembled or modified. In addition, care should be taken to assure that seat belts and belt hardware are not damaged by seat hinges, doors or other abuse.

⚠ WARNING

- **When you return the rear seatback to its upright position after the rear seatback has been folded down, be careful not to damage the seat belt webbing or buckle. Be sure that the webbing or buckle does not get caught or pinched in the rear seat. A seat belt with damaged webbing or buckle could possibly fail during a collision or sudden stop, resulting in serious injury. If the webbing or buckles are damaged, get them replaced immediately.**
- **Seatbelts can become hot in a vehicle that has been closed up in sunny weather.**

  They could burn infants and children.

Periodic inspection

All seat belts should be inspected periodically for wear or damage of any kind. Any damaged parts should be replaced as soon as possible.

Keep belts clean and dry

Seat belts should be kept clean and dry. If belts become dirty, they can be cleaned by using a mild soap solution and warm water. Bleach, dye, strong detergents or abrasives should not be used because they may damage and weaken the fabric.

When to replace seat belts

Entire in-use seat belt assembly or assemblies should be replaced if the vehicle has been involved in an accident. This should be done even if no damage is visible. In this case, have the system replaced by a professional workshop. Kia recommends to consult an authorised Kia dealer/service partner.

CHILD RESTRAINT SYSTEM

Children riding in the vehicle should sit in the rear seat and must always be properly restrained to minimise the risk of injury in an accident, sudden stop or sudden manoeuvre. According to accident statistics, children are safer when properly restrained in the rear seats than in the front seat. Larger children not in a child restraint system should use one of the seat belts provided.

You should be aware of the specific requirements in your country. Child restraint systems must be properly placed and installed in the vehicle seat. You must use a commercially available child restraint system that meets the requirements of the Safety Standards of your country.

Child restraint systems are designed to be secured in vehicle seats by lap belts or the lap belt portion of a lap/shoulder belt, or by a top tether anchor and/or ISOFIX anchors (if equipped).

Children could be injured or killed in a crash if their restraints are not properly secured. For small children and babies, a child restraint system must be used.

Before buying a particular child restraint system, make sure it fits your vehicle seat and seat belts, and fits your child. Follow all the instructions provided by the manufacturer when installing the child restraint system.

⚠ WARNING

- **To ensure the safety of your child, we strongly recommend a child restraint system to be installed in the rear seats. When installing a child restraint on the front passenger's seat, the air bag must be deactivated and set to the OFF position. (if equipped, passenger's air bag ON/OFF switch)**
- **A seat belt or child restraint system can become very hot if it is left in a closed vehicle on a sunny day, even if the outside temperature does not feel hot. Be sure to check the seat cover and buckles before placing a child there.**

(Continued)

(Continued)

- **When the child restraint system is not in use, store it in the luggage area or fasten it with a seat belt or ISOFIX anchorage, so that it will not be thrown forward in case of a sudden stop or an accident.**
- **All children, even those too large for child restraints, should ride in the rear seat. All children, even those too large for child restraints, should ride in the rear seats.**

⚠ WARNING

To reduce the chance of serious or fatal injuries:

- **Children of all ages are safer when restrained in the rear seat. A child riding in the front passenger seat can be forcefully struck by an inflating air bag resulting in serious or fatal injuries.**

(Continued)

(Continued)

- Always follow the child restraint system manufacturer's instructions for installation and use of the child restraint system.
- Always make sure the child restraint system is secured properly in the vehicle and your child is securely restrained in the child restraint system.
- Never hold a child in your arms or lap when riding in a vehicle. The violent forces created during a crash will tear the child from your arms and throw the child against the vehicle's interior.
- Never put a seat belt over yourself and a child. During a crash, the belt could press deep into the child causing serious internal injuries.
- Never leave children unattended in a vehicle – not even for a short time. The vehicle can heat up very quickly, resulting in serious injuries to children inside the vehicle.

(Continued)

(Continued)

Even very young children may inadvertently cause the vehicle to move, entangle themselves in the windows, or lock themselves or others inside the vehicle.

- Never allow two children, or any two persons, to use the same seat belt.
- Children often squirm and reposition themselves improperly. Never let a child ride with the shoulder belt under their arm or behind their back. Always properly position and secure children in the rear seat.
- Never allow a child to stand-up or kneel on the seat or floor of a moving vehicle. During a collision or sudden stop, the child can be violently thrown against the vehicle's interior, resulting in serious injury.

(Continued)

(Continued)

- Never use an infant carrier or a child restraint system that "hooks" over a seatback, it may not provide adequate security in an accident.
- Seat belts can become very hot, especially when the vehicle is parked in direct sunlight. Always check the seat belt buckles before fastening them over a child.
- After an accident, have the system checked by a professional workshop. Kia recommends to visit an authorised Kia dealer/service partner.
- If there is not enough space to place the child restraint system because of the driver's seat, install the child restraint system in the rear right seat.

Using a child restraint system

Rearward-facing child restraint system

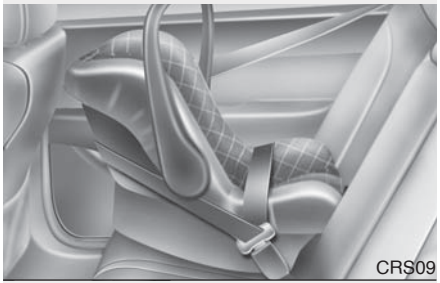

Forward-facing child restraint system



For small children and babies, the use of a child restraint system is required. The child restraint system should be of appropriate size for the child and should be installed in accordance with the manufacturer's instructions.

For safety reasons, we recommend the child restraint system to be used in the rear seats.

⚠ WARNING

Never place a rearward facing child restraint system in the front passenger seat, unless the passenger frontal airbag is deactivated. An inflating passenger frontal airbag could impact the rearward facing child restraint system and kill the child.

⚠ WARNING

- **A child can be seriously injured or killed in a collision if the child restraint system is not properly anchored to the vehicle and the child is not properly restrained in the child restraint system. Before installing the child restraint system, read the instructions supplied by the child restraint system manufacturer.**

(Continued)

(Continued)

- **If the seat belt does not operate as described in this section, have the system checked by a professional workshop. Kia recommends to visit an authorised Kia dealer/service partner.**
- **Failure in observing this manual's instructions regarding child restraint systems and the instructions provided with the child restraint system could increase the chance and/or severity of injury in an accident.**
- **Temporarily re-adjust or remove any headrest interfering with the proper installation of child restraint system. Make sure to put any removed headrests back into position for adult occupants.**

Installing a child restraint system with a lap belt (on the centre rear seat) (if equipped) - Except Europe


1GHA2260/H

To install a child restraint system on the centre rear seats, do the following:

1. Place the child restraint system on the centre rear seat.
2. Extend the latch plate tongue of the lap belt.
3. Route the lap belt through the child restraint system according to the child restraint system manufacturer's instructions.
4. Buckle the seat belt and adjust the lap belt for a snug hold on the child restraint system by pulling on the loose end of the belt. After installation of the child restraint system, try to move it in all directions to be sure the child restraint system is securely installed.

Installing a child restraint system with a lap/shoulder belt

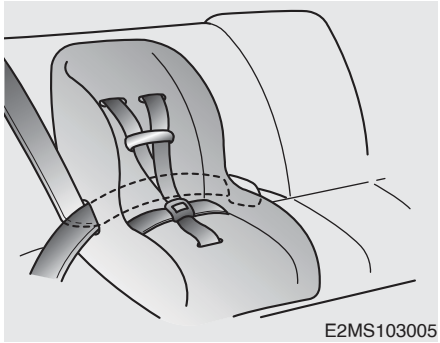
E2MS103005

To install a child restraint system on the seat, do the following:

1. For stable and safe installation of child restraint system, adjust the vehicle seat (seatback angle and/or seat forward and backward) so that your child can fit in the child restraint system in a comfortable manner. To properly accommodate child restraint systems in all adjustment positions, the front passenger seat may be moved rearwards with the seat back not passing beyond the seat belt shoulder anchor.

Place the child restraint system in the seat and route the lap/shoulder belt around or through the child restraint system, following the child restraint system manufacturer's instructions. Be sure the seat belt webbing is not twisted.

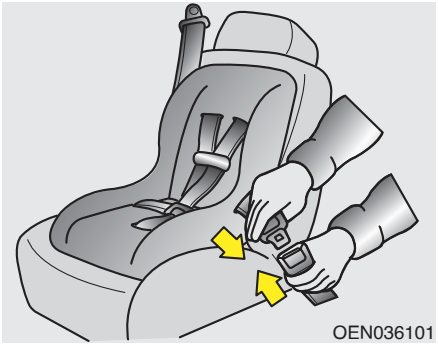

2. Fasten the lap/shoulder belt latch into the buckle. Listen for the distinct "click" sound.

Position the release button so that it is easy to access in case of an emergency.

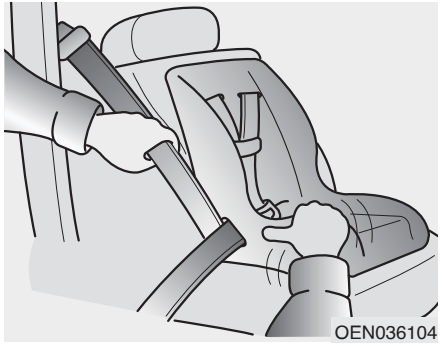

3. Buckle the seat belt and allow the seat belt to take up any slack. After installation of the child restraint system, try to move it in all directions to be sure the child restraint system is securely installed.

If you need to tighten the belt, pull the webbing toward the retractor. When you unbuckle the seat belt and allow it to retract, the retractor will automatically revert back to its normal seated passenger emergency locking usage condition.

Suitability of each seating position for "universal" category belted child restraint systems according to ECE regulations

Use child restraint systems that have been officially approved and are appropriate for your children.
When using the child restraint systems, refer to the following table.

Mass Group		Seating Position							
		Front Passenger Outboard		Second Row				Third row	
		Airbag activated	Airbag deactivated	Outboard Left	Centre (3 POINT BELT)	Centre (2 POINT BELT)	Outboard Right	Left	Right
Group 0 (0-9months)	up to 10kg	X	U*	U	U	UF	U	U	U
Group 0 + (0-2years)	up to 13kg	X	U*	U	U	UF	U	U	U
Group I (9months-4years)	9 to 18kg	X	U*	U	U	UF	U	U	U
Group II (15 to 25kg)	15 to 25kg	UF	U*	U	U	UF	U	U	U
Group III (22 to 36kg)	22 to 36kg	UF	U*	U	U	UF	U	U	U

U = Suitable for "universal" category Child Restraint Systems approved for use in this mass group

U*= Suitable when seat in rearmost & seatback is in most upright position when install the CRS removed head restraint

UF = Suitable for forward facing "universal" category restraints approved for use in this mass group

L = Suitable for particular child restraints given on attached list. These restraints may be of the "specific vehicle", "restricted" or "semi-universal" categories.

B = Built-in restraint approved for this mass group.

X = Seat position not suitable for children in this mass group.

❉ The actual adjustment of the front passenger seat may differ, provided that installation instructions from the child seat handbook are observed.

Securing a child restraint systems with top tether anchor system (if equipped)



Child restraint system top tether anchorages are located on the back of the rear seatbacks.

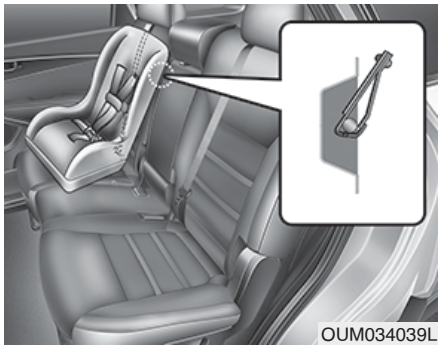

1. Route the child restraint system top tether over the seatback.

   For vehicles with adjustable headrest, route the top tether under the headrest and between the headrest posts, otherwise route the top tether over the top of the seatback. In case of interference between the child restraint system and the headrest remove the particular head restraint for better fitment of the child restraint system.
2. Connect and tighten the top tether to the corresponding child restraint system to secure the child restraint system.

⚠ WARNING - Australian design rule

Child restraint anchorages are designed to withstand only those loads imposed by correctly fitted child restraints. Under no circumstances are they to be used for adult seat belts, harnesses, or for attaching other items or equipment to the vehicle.

⚠ WARNING

A child can be seriously injured or killed in a collision if the child restraint system is not properly anchored to the car and the child is not properly restrained in the child restraint system. Always follow the child restraint system manufacturer's instructions for installation and use.

⚠ WARNING - Top tether

Never mount more than one child restraint system to a single top tether or to a single top tether anchorage point. The increased load caused by multiple child restraint system may cause the top tethers or anchorage points to break, causing serious injury or death.

⚠ WARNING - Child restraint system check

Check that the child restraint system is secure by pushing and pulling it in different directions. Incorrectly fitted child restraint systems may swing, twist, tip or separate causing death or serious injury.

⚠ WARNING - Child restraint system anchorage

- **Child restraint system anchorages are designed to withstand only those loads imposed by correctly fitted child restraint systems. Under no circumstances are they to be used for adult seat belts or harnesses or for attaching other items or equipment to the vehicle.**
- **The top tether may not work properly if attached somewhere other than the correct tether anchor.**

Securing a child restraint system with "ISOFIX" system and "Top tether Anchorages"

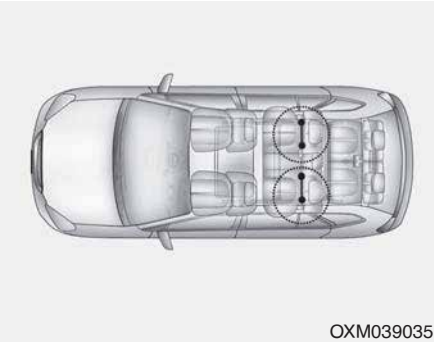

OXM039035

ISOFIX is a standardised method of fitting child restraint systems that eliminates the need to use the standard adult seat belt to secure the child restraint system in the vehicle. This causes a much more secure and positive location with the added benefit of easier and quicker installation.

An ISOFIX child restraint system may only be installed if it has vehicle-specific or universal approval in accordance with the requirements of ECE-R 44, ECE-R 129 or relevant regulation.

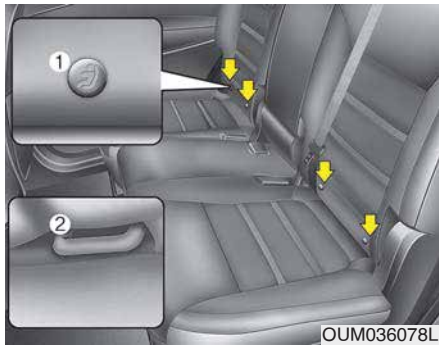

OUM036078L

There are ISOFIX symbols (1) located on the lower portion of each side of the 2nd row seatbacks. These symbols indicate the position of the ISOFIX anchors (2) for child restraint systems.

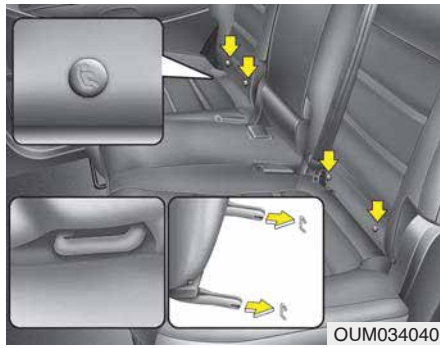

OUM034040

Both rear outboard seats are equipped with a pair of ISOFIX anchorages as well as a corresponding top tether anchorage on the back side of the back rest. The ISOFIX anchorages are located between seat cushion and back rest, marked with the ISOFIX icon.

For installation, child restraint system ISOFIX connectors have to engage with the vehicles ISOFIX anchorages (listen for a CLICK, check potential visual indicators on the child restraint system and cross-check by pulling).

child restraint systems with universal approval to ECE-R 44, ECE-R 129 or relevant regulation need to be fixed additionally with a top tether strap connected to the corresponding top tether anchorage point in the back rest.

The installation and the use of a child restraint system has to be done according to the installation manual, which is provided with the ISOFIX child restraint system.

For stable and safe installation of child restraint system, adjust the seat position (seat-back angle and/or seat forward and backward) so that your child can fit in the child restraint system in a comfortable manner.

⚠ WARNING

- **When using the vehicle's "ISOFIX" system to install a child restraint system in the rear seat, all unused vehicle rear seat belt metal latch plates or tabs must be latched securely in their seat belt buckles and the seat belt webbing must be retracted behind the child restraint system to prevent the child from reaching and taking hold of unretracted seat belts. Unlatched metal latch plates or tabs may allow the child to reach the unretracted seat belts which may result in strangulation and a serious injury or death to the child in the child restraint system.**
- **Do not place anything around the lower anchors. Also make sure that the seat belt is not caught in the lower anchors.**

To secure the child restraint system

1. To engage the child restraint system to the ISOFIX anchor, insert the child restraint system latch into the ISOFIX anchor. Listen for the audible “click” sound.

⚠ CAUTION

Do not allow the rear seat belt webbing to get scratched or pinched by the ISOFIX-seat latch and ISOFIX anchor during installation.

2. Connect the top tether strap to the corresponding top tether anchorage and tighten it. (Refer to the previous page.)

⚠ WARNING

- **Do not install a child restraint system at the centre of the rear seat using the vehicle's ISOFIX anchors. The ISOFIX anchors are only provided for the left and right outboard rear seating positions. Do not misuse the ISOFIX anchors by attempting to attach a child restraint system in the middle of the rear seat to the ISOFIX anchors.**

  In a crash, the child restraint system ISOFIX attachments may not be strong enough to secure the child restraint system properly in the centre of the rear seat and may break, causing serious injury or death.

(Continued)

(Continued)

- **Do not mount more than one child restraint system to an ISOFIX anchorage point. The improper increased load may cause the anchorage points or top tether anchor to break, causing serious injury or death.**
- **Attach the ISOFIX or ISOFIX-compatible child restraint system only to the appropriate locations shown in the illustration.**
- **Always follow the installation and use instructions provided by the manufacturer of the child restraint system.**

Suitability of each seating position for ISOFIX child restraint systems according to ECE regulations

Mass Group	Size Class	Fixture	vehicle ISOFIX positions					
			1st	2nd row			3rd row	
			Passenger	Left Hand	Centre	Right Hand	Left Hand	Right Hand
Carrycot	F	ISO/L1	N/A	X	N/A	X	N/A	N/A
	G	ISO/L2	N/A	X	N/A	X	N/A	N/A
0 : UP TO 10KG	E	ISO/R1	N/A	IL	N/A	IL	N/A	N/A
0+ : UP TO 13KG	E	ISO/R1	N/A	IL	N/A	IL	N/A	N/A
	D	ISO/R2	N/A	IL	N/A	IL	N/A	N/A
	C	ISO/R3	N/A	IL	N/A	IL	N/A	N/A
1 : 9 TO 18KG	D	ISO/R2	N/A	IL	N/A	IL	N/A	N/A
	C	ISO/R3	N/A	IL	N/A	IL	N/A	N/A
	B	ISO/F2	N/A	IUF, IL	N/A	IUF, IL	N/A	N/A
	B1	ISO/F2X	N/A	IUF, IL	N/A	IUF, IL	N/A	N/A
	A	ISO/F3	N/A	IUF, IL	N/A	IUF, IL	N/A	N/A

IUF = suitable for ISOFIX forward child restraints systems of universal category approved for use in the mass group.

IL = suitable for particular ISOFIX child restraints systems (CRS) given in the attached list. These ISOFIX CRS are those of the "specific vehicle", "restricted" or "semi-universal" categories.

X = ISOFIX position not suitable for ISOFIX child restraint system in this mass group and/or this size class.

* ISOFIX child restraint system size classes and fixtures

A - ISO/F3: Full-Height Forward-Facing toddler CRS (height 720 mm)

B - ISO/F2: Reduced-Height Forward-Facing toddler CRS (height 650 mm)

B1 - ISO/F2X: Reduced-Height Second Version Back Surface Shape Forward-Facing toddler CRS (height 650 mm)

C - ISO/R3: Full-Size Rearward-Facing toddler CRS

D - ISO/R2: Reduced-Size Rearward-Facing toddler CRS

E - ISO/R1: Infant-Size Rearward-Facing CRS

F - ISO/L1: Left Lateral Facing position CRS (carry-cot)

G - ISO/L2: Right Lateral Facing position CRS (carry-cot)

AIR BAG - SUPPLEMENTAL RESTRAINT SYSTEM (IF EQUIPPED)

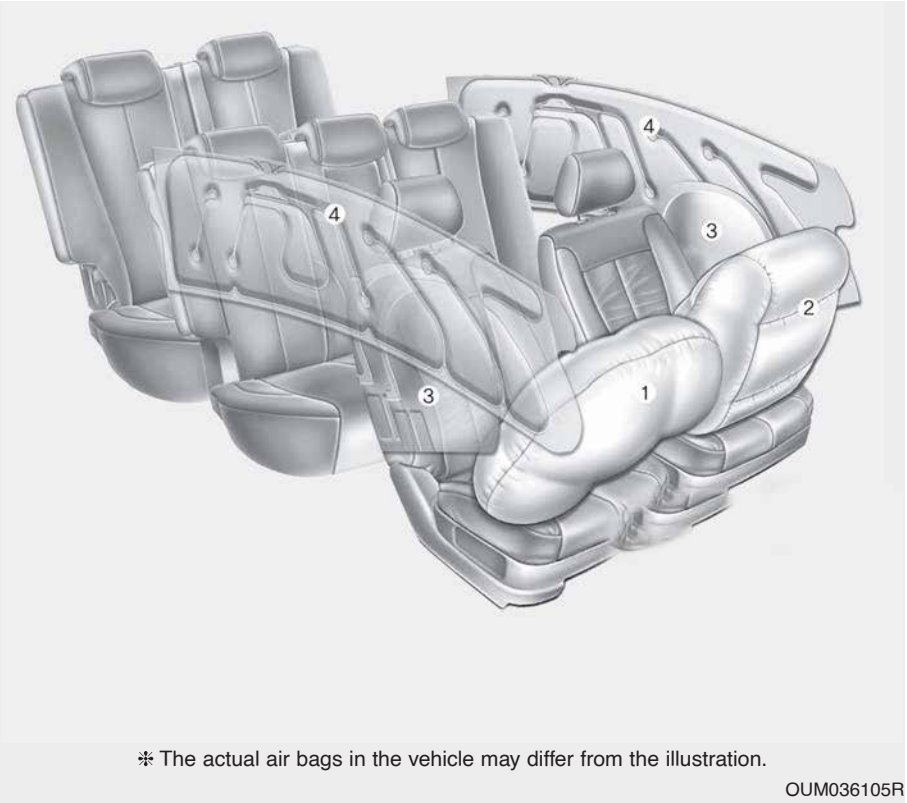

❊ The actual air bags in the vehicle may differ from the illustration.

OUM036105R

(1) Driver's front air bag
(2) Passenger's front air bag
(3) Side air bag*
(4) Curtain air bag*
(5) Passenger's front air bag ON/OFF switch*

* : if equipped

⚠ WARNING

- **Even in vehicles with air bags, you and your passengers must always wear the safety belts provided in order to minimise the risk and severity of injury in the event of a collision or rollover.**
- **SRS and pretensioners contain explosive chemicals.**

  If scraping a vehicle without removing SRS and pretensioners from a vehicle, it may cause fire. Before scraping a vehicle, contact a professional workshop. Kia recommends to visit an authorised Kia dealer/service partner.
- **Keep the SRS parts and wirings away from water or any liquid. If the SRS components are inoperative due to exposure to water or liquids, it may cause fire or severe injury.**

How does the air bag system operate

- Air bags are activated (able to inflate if necessary) only when the ignition switch is turned to the ON or START position.
- Air bags inflate instantly in the event of a serious frontal collision or side collision (if equipped with a side air bag or curtain air bag) in order to help protect the occupants from serious physical injury.

✻ NOTICE - if equipped with rollover sensor

Also, the air bags inflate instantly in the event of a rollover (if equipped with a side air bag or curtain air bag) in order to help protect the occupants from serious physical injury.

- There is no single speed at which the air bags will inflate.

  Generally, air bags are designed to inflate based upon the severity of a collision and its direction. These two factors determine whether the sensors produce an electronic deployment/ inflation signal.
- Air bag deployment depends on a number of factors including vehicle speed, angles of impact and the density and stiffness of the vehicles or objects which your vehicle hits in the collision. The determining factors are not limited to those mentioned above.
- The front air bags will completely inflate and deflate in an instant.

  It is virtually impossible for you to see the air bags inflate during an accident.

  It is much more likely that you will simply see the deflated air bags hanging out of their storage compartments after the collision.

- In order to help provide protection in a severe collision, the air bags must inflate rapidly. The speed of the air bag inflation is a consequence of extremely short time in which a collision occurs and the need to inflate the air bag between the occupant and the vehicle structures before the occupant impacts those structures.

  This speed of inflation reduces the risk of serious or life-threatening injuries in a severe collision and is thus a necessary part of the air bag design.

  However, air bag inflation can also cause injuries which can include facial abrasions, bruises and broken bones because the inflation speed also causes the air bags to expand with a great deal of force.
- **There are even circumstances under which contact with the steering wheel air bag can cause fatal injuries, especially if the occupant is positioned excessively close to the steering wheel.**

⚠ WARNING

- **To avoid severe personal injury or death caused by deploying air bags in a collision, the driver should sit as far back from the steering wheel air bag as possible (at least 250 mm (10 inches) away). The front passengers should always move their seats as far back as possible and sit back in their seat.**
- **Air bags inflate instantly in the event of a collision, and passengers may be injured by the air bag expansion force if they are not in a proper position.**
- **Air bag inflation may cause injuries including facial or bodily abrasions, injuries from broken glasses or burns.**

Noise and smoke

When the air bags inflate, they make a loud noise and they leave smoke and powder in the air inside of the vehicle. This is normal and is a result of the ignition of the air bag inflator. After the air bag inflates, you may feel substantial discomfort in breathing due to the contact of your chest with both the seat belt and the air bag, as well as from breathing the smoke and powder. **Open your doors and/or windows as soon as possible after the impact in order to reduce discomfort and prevent prolonged exposure to smoke and powder.**

Though the smoke and powder are non-toxic, they may cause irritation to the skin (eyes, nose and throat, etc). If this is the case, wash and rinse with cold water immediately and consult a doctor if the symptom persists.

⚠ WARNING

- **When the air bags deploy, the air bag related parts in the steering wheel, instrument panel, front seats and/or in both sides of the roof rails above the front and rear doors are very hot. To prevent injury, do not touch the air bag storage area's internal components immediately after an air bag has inflated.**
- **Do not install or place any accessories near air bag deployment areas, such as the instrument panel, windows, pillars, and roof rails.**

Front passenger's air bag warning label for child restraint system

■ Type A



OYDESA2042

⚠ WARNING

Never place a rear facing child restraint in the front passenger seat, unless the passenger-side air bag is deactivated. An inflating passenger-side air bag could impact the rear-facing child restraint and kill the child.

In addition, we recommend that you do not place front-facing child restraints in the front passenger's seat either. If the front passenger air bag inflates, it could cause serious or fatal injuries to the child.

If your vehicle is equipped with the passenger's front air bag ON/OFF switch, you can activate or deactivate the front passenger's air bag when necessary.

For more details, please refer to "Passenger's front air bag ON/OFF switch" in this chapter. (if equipped)

⚠ WARNING

- **Extreme Hazard! Do not use a rearward facing child restraint on a seat protected by an air bag in front of it!**
- **NEVER use a rearward facing child restraint on a seat protected by an ACTIVE AIR BAG in front of it.**

  DEATH or SERIOUS INJURY to the CHILD can occur.
- **When children are seated in the rear outboard seats of a vehicle equipped with side and/or curtain air bags, be sure to install the child restraint system as far away from the door side as possible, and securely lock the child restraint system in position.**

  Inflation of side and/or curtain air bags could cause serious injury or death to an infant or child.

Air bag warning light



W7-147

The purpose of the air bag warning light in your instrument panel is to alert you of a potential problem with your air bag - Supplemental Restraint System (SRS).
When the ignition switch is turned ON, the warning light should illuminate for approximately 6 seconds, then go off.
Have the system checked if:

- The light does not turn on briefly when you turn the ignition ON.
- The light stays on after illuminating for approximately 6 seconds.
- The light comes on whilst the vehicle is in motion.
- The light blinks when the ignition switch is in ON position.

SRS components and functions

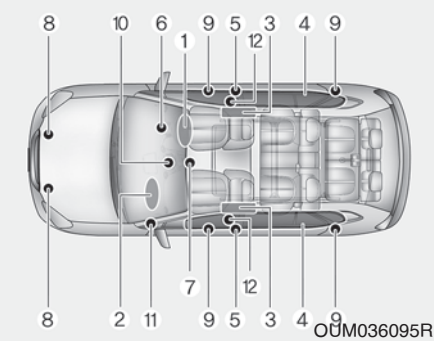

The SRS consists of the following components:

1. Driver's front air bag module
2. Passenger's front air bag module
3. Side air bag modules*
4. Curtain air bag modules*
5. Retractor pre-tensioner assemblies*
6. Air bag warning light
7. SRS control module (SRSCM)/ Rollover sensor*
8. Front impact sensors
9. Side impact sensors*
10. Passenger's front air bag ON/OFF indicator (front passenger's seat only)*
11. Passenger's front air bag ON/OFF switch*
12. Front anchor pre-tensioner*

* : if equipped

The SRSCM continually monitors all SRS components whilst the ignition switch is ON to determine if a crash impact is severe enough to require air bag deployment or pre-tensioner seat belt deployment.

The SRS air bag warning light on the instrument panel will illuminate for about 6 seconds after the ignition switch is turned to the ON position, after which the SRS air bag warning light should go out.

⚠ WARNING

If any of the following conditions occurs, this indicates a malfunction of the SRS. In this case, have the system inspected by a professional workshop. Kia recommends to visit an authorised Kia dealer/service partner.

- **The light does not turn on briefly when you turn the ignition ON.**
- **The light stays on after illuminating for approximately 6 seconds.**
- **The light comes on whilst the vehicle is in motion.**
- **The light blinks when the ignition switch is in ON position.**

Driver's front air bag (1)



The front air bag modules are located both in the centre of the steering wheel and in the front passenger's panel above the glove box. When the SRSCM detects a sufficiently severe impact to the front of the vehicle, it will automatically deploy the front air bags.

Driver's front air bag (2)



Upon deployment, tear seams molded directly into the pad covers will separate under pressure from the expansion of the air bags. Further opening of the covers then allows full inflation of the air bags.

Driver's front air bag (3)



A fully inflated air bag, in combination with a properly worn seat belt, slows the driver's or the passenger's forward motion, reducing the risk of head and chest injury.

After complete inflation, the air bag immediately starts deflating, enabling the driver to maintain forward visibility and the ability to steer or operate other controls.

Passenger's front air bag



⚠ WARNING

- **Do not install or place any accessories (drink holder, sticker, etc.) on the front passenger's panel above the glove box in a vehicle with a passenger's air bag. Such objects may become dangerous projectiles and cause injury if the passenger's air bag inflates.**

(Continued)

(Continued)

- **When installing a container of liquid air freshener inside the vehicle, do not place it near the instrument cluster nor on the instrument panel surface.**

  It may become a dangerous projectile and cause injury if the passenger's air bag inflates.

⚠ WARNING

- **If an air bag deploys, there may be a loud noise followed by a fine dust released in the vehicle. These conditions are normal and are not hazardous - the air bags are packed in this fine powder. The dust generated during air bag deployment may cause skin or eye irritation as well as aggravate asthma for some persons. Always wash all exposed skin areas thoroughly with cold water and mild soap after an accident in which the air bags were deployed.**

(Continued)

(Continued)

- **The SRS can function only when the ignition key is in the ON position. If the SRS air bag warning light does not illuminate, or continuously remains on after illuminating for about 6 seconds when the ignition key is turned to the ON position, or after the engine is started, comes on whilst driving, the SRS is not working properly. In this case, have the system inspected by a professional workshop. Kia recommends to visit an authorised Kia dealer/service partner.**
- **Before you replace a fuse or disconnect a battery terminal, turn the ignition switch to the LOCK position and remove the ignition key. Never remove or replace the air bag related fuse(s) when the ignition switch is in the ON position. Failure to heed this warning will cause the SRS air bag warning light to illuminate.**

Driver's and passenger's front air bag

■ Driver's front air bag



■ Passenger's front air bag

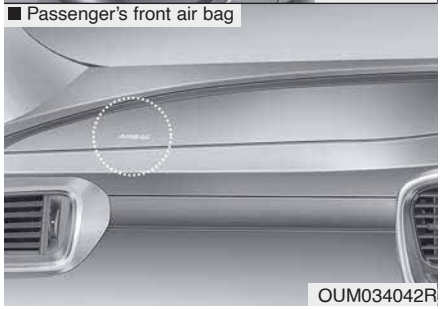

Your vehicle is equipped with a Supplemental Restraint (Air Bag) System and lap/shoulder belts at both the driver and passenger seating positions.

The indicators of the system's presence are the letters "AIRBAG" located on the air bag pad cover on the steering wheel and the passenger's side front panel pad above the glove box.

The SRS consists of air bags installed under the pad covers in the centre of the steering wheel and the passenger's side in the front panel above the glove box.

The purpose of the SRS is to provide the vehicle's driver and/or the front passenger with additional protection than that offered by the seat belt system alone in case of a frontal impact of sufficient severity.

⚠ WARNING

Always use seat belts and child restraints – every trip, every time, everyone! Air bags inflate with considerable force and in the blink of an eye. Seat belts help keep occupants in proper position to obtain maximum benefit from the air bag. Even with air bags, improperly and unbelted occupants can be severely injured when the air bag inflates. Always follow the precautions about seat belts, air bags and occupant safety contained in this manual.

To reduce the chance of serious or fatal injuries and receive the maximum safety benefit from your restraint system:

- **Never place a child in any child or booster seat in the front seat.**
- **ABC – Always Buckle Children in the 2nd row seat. It is the safest place for children of any age to ride.**

(Continued)

(Continued)

- **Front and side air bags can injure occupants improperly positioned in the front seats.**
- **Move your seat as far back as practical from the front air bags, whilst still maintaining control of the vehicle.**
- **You and your passengers should never sit or lean unnecessarily close to the air bags. Improperly positioned drivers and passengers can be severely injured by inflating air bags.**
- **Never lean against the door or centre console – always sit in an upright position.**
- **Do not allow a passenger to ride in the front seat when the passenger's front air bag OFF indicator is illuminated, because the air bag will not deploy in the event of a moderate or severe frontal crash.**

(Continued)

(Continued)

- **No objects should be placed over or near the air bag modules on the steering wheel, instrument panel or the front passenger's panel above the glove box, because any such object could cause harm if the vehicle is in a crash severe enough to cause the air bags to deploy.**
- **Do not tamper with or disconnect SRS wiring or other components of the SRS system. Doing so could result in injury, due to accidental deployment of the air bags or by rendering the SRS inoperative.**
- **If the SRS air bag warning light remains illuminated whilst the vehicle is being driven, have the system inspected by a professional workshop. Kia recommends to visit an authorised Kia dealer/service partner.**

(Continued)

(Continued)

- **Air bags can only be used once - have the system replaced by a professional workshop.**

  Kia recommends to visit an authorised Kia dealer/service partner.
- **The SRS is designed to deploy the front air bags only when an impact is sufficiently severe and when the impact angle is less than 30° from the forward longitudinal axis of the vehicle. Additionally, the air bags will only deploy once. Seat belts must be worn at all times.**
- **Front air bags are not intended to deploy in side-impact, rear-impact or rollover crashes. In addition, front air bags will not deploy in frontal crashes below the deployment threshold.**

(Continued)

(Continued)

- **A child restraint system must never be placed in the front seat. The infant or child could be severely injured or killed by an air bag deployment in case of an accident.**
- **Children age 13 and under must always be properly restrained in the rear seat. Never allow children to ride in the front passenger seat. If a child over 13 must be seated in the front seat, he or she must be properly belted and the seat should be moved as far back as possible.**
- **For maximum safety protection in all types of crashes, all occupants including the driver should always wear their seat belts whether or not an air bag is also provided at their seating position to minimise the risk of severe injury or death in the event of a crash.**

(Continued)

(Continued)

Do not sit or lean unnecessarily close to the air bag whilst the vehicle is in motion.

- **Sitting improperly or out of position can result in serious or fatal injury in a crash. All occupants should sit upright with the seat back in an upright position, centred on the seat cushion with their seat belt on, legs comfortably extended and their feet on the floor until the vehicle is parked and the ignition key is removed.**
- **The SRS air bag system must deploy very rapidly to provide protection in a crash. If an occupant is out of position because of not wearing a seat belt, the air bag may forcefully contact the occupant causing serious or fatal injuries.**

⚠ WARNING - No attaching objects

No objects (such as crash pad cover, mobile phone holder, cup holder, perfume or stickers) should be placed over or near the air bag modules on the steering wheel, instrument panel, windscreen glass, and the front passenger's panel above the glove box. Such objects could cause harm if the vehicle is in a crash severe enough to cause the air bags to deploy. Do not place any objects over the air bag or between the air bag and yourself.

Side air bag (if equipped)





❈ The actual air bags in the vehicle may differ from the illustration.

Your vehicle is equipped with a side air bag in each front seat.

The purpose of the air bag is to provide the vehicle's driver and/or the front passenger with additional protection than that offered by the seat belt alone.

The side air bags are designed to deploy only during certain side-impact collisions, depending on the crash severity, angle, speed and point of impact. However, when side deployment threshold is satisfied at front-impact, side air bags may deploy. The side air bags are not designed to deploy in all side impact or rollover situations.

The side air bags may deploy on the side of the impact or on both side.

✻ NOTICE - if equipped with rollover sensor

- **Also, both side of the side air bags deploy in certain rollover situations.**
- **The side air bag may deploy when the rollover sensor detects the situation as a rollover.**

⚠ WARNING

Do not allow the passengers to lean their heads or bodies onto doors, put their arms on the doors, stretch their arms out of the window, or place objects between the doors and passengers when they are seated on seats equipped with side and/or curtain air bags.

⚠ WARNING

- **The side air bag is supplemental to the driver's and the passenger's seat belt systems and is not a substitute for them. Therefore your seat belts must be worn at all times whilst the vehicle is in motion. The air bags deploy only in certain side impact or rollover*1 conditions severe enough to cause significant injury to the vehicle occupants.**

(Continued)

(Continued)

- **For best protection from the side air bag system and to avoid being injured by the deploying side air bag, both front seat occupants should sit in an upright position with the seat belt properly fastened. The driver's hands should be placed on the steering wheel at the 9:00 and 3:00 positions.**

  The passenger's arms and hands should be placed on their laps.
- **Do not use any accessory seat covers.**
- **Use of seat covers could reduce or prevent the effectiveness of the system.**
- **To prevent unexpected deployment of the side air bag that may result in personal injury, avoid impact to the side impact sensor when the ignition switch is on.**

(Continued)

*1 Only vehicle equipped with rollover sensor.

(Continued)

- **If the seat or seat cover is damaged, have the system serviced by a professional workshop.**

  Kia recommends to visit an authorised Kia dealer/service partner.

⚠ WARNING - No attaching objects

- **Do not place any objects over the air bag or between the air bag and yourself. Also, do not attach any objects around the area the air bag inflates such as the door, side door glass, front and rear pillar.**
- **Do not place any objects between the door and the seat. They may become dangerous projectiles if the side air bag inflates.**
- **Do not install any accessories on the side or near the side air bags.**

Curtain air bag (if equipped)

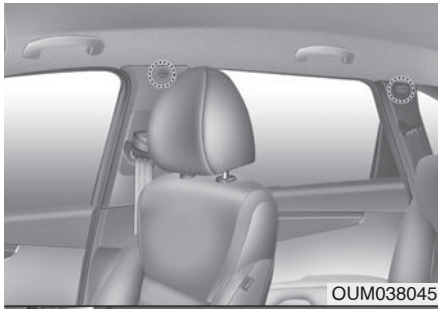

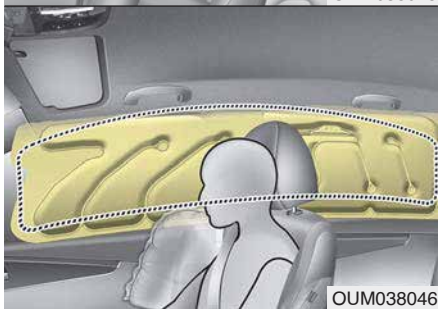

✻ The actual air bags in the vehicle may differ from the illustration.

Curtain air bags are located along both sides of the roof rails above the front and rear doors.

They are designed to help protect the heads of the front seat occupants and the rear outboard seat occupants in certain side impact collisions.

The curtain air bags are designed to deploy during certain side impact collisions, depending on the crash severity, angle, speed and point of impact. However, when side deployment threshold is satisfied at front-impact, side air bags may deploy.

The curtain air bags may deploy on the side of the impact or on both side.

The curtain air bags are not designed to deploy in all side impacts or rollover situations.

✻ NOTICE - if equipped with rollover sensor

- **Also, both sides of the curtain air bags deploy in certain rollover situations.**
- **The curtain air bag may deploy when the rollover sensor detects the situation as a rollover.**

⚠ WARNING

- **Do not hang heavy items on the coat hooks for safety reasons.**
- **In order for side and curtain air bags to provide the best protection, front seat occupants and outboard rear occupants should sit in an upright position with the seat belts properly fastened. Importantly, children should sit in a proper child restraint system in the rear seat.**
- **When children are seated in the rear outboard seats, they must be seated in the proper child restraint system. Make sure to position the child restraint system as far away from the door side as possible, and secure the child restraint system in a locked position.**

(Continued)

(Continued)

- **Do not allow the passengers to lean their heads or bodies against doors, put their arms on the doors, stretch their arms out of the window or place objects between the doors and passengers when they are seated on seats equipped with side and curtain air bags.**
- **Never try to open or repair any components of the side curtain air bag system. If necessary, have the system serviced by a professional workshop. Kia recommends to visit an authorised Kia dealer/service partner.**

Failure to follow the above instructions can result in injury or death to the vehicle occupants in an accident.

⚠ WARNING - No attaching objects

- **Do not place any objects over the air bag. Also, do not attach any objects around the area the air bag inflates such as the door, side door glass, front and rear pillar, roof side rail.**
- **Do not hang hard or breakable objects on the clothes hanger.**

Why didn't my air bag go off in a collision? (Inflation and non-inflation conditions of the air bag)

There are many types of accidents in which the air bag would not be expected to provide additional protection.

These include rear impacts, second or third collisions in multiple impact accidents, as well as low speed impacts.

Air bag collision sensors

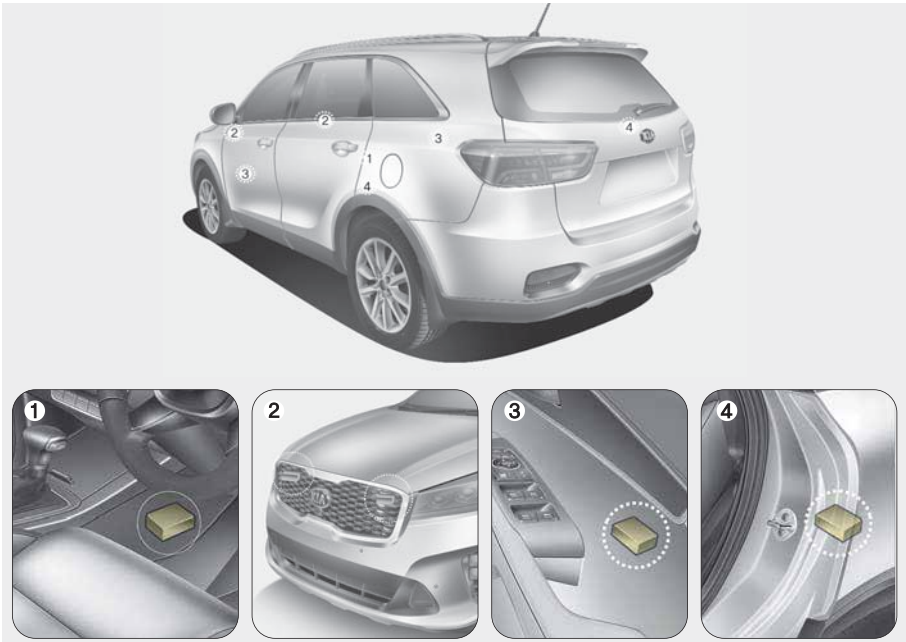

OUM038047L/OUM038048R/OUM038049L/OUM038050R/OUM034051

(1) SRS control module/ Rollover sensor (if equipped)
(2) Front impact sensor
(3) Side impact sensor (if equipped)
(4) Side impact sensor (if equipped)

✻ The actual air bag collision sensors in the vehicle may differ from the illustration.

⚠ WARNING

- **Do not hit or allow any objects to impact the locations where air bag or sensors are installed.**

  This may cause unexpected air bag deployment, which could result in serious personal injury or death.
- **If the installation location or angle of the sensors is altered in any way, the air bags may deploy when they should not or they may not deploy when they should, causing severe injury or death.**

  Therefore, do not try to perform maintenance on or around the air bag sensors. Have the system serviced by a professional workshop. Kia recommends to visit an authorised Kia dealer/service partner.

(Continued)

(Continued)

- **Problems may arise if the sensor installation angles are changed due to the deformation of the front bumper, body or front door and C pillars where side collision sensors are installed. In this case, have the system serviced by a professional workshop. Kia recommends to visit an authorised Kia dealer/service partner.**
- **Your vehicle has been designed to absorb impact and deploy the air bag(s) in certain collisions. Installing bumper guards or replacing a bumper with non-genuine parts may adversely affect your vehicles collision and air bag deployment performance.**

⚠ WARNING - if equipped with rollover sensor

If your vehicle is equipped with side and curtain air bag, set the ignition switch to OFF or ACC position when the vehicle is being towed.

The side and curtain air bag may deploy when the ignitions is ON, and the rollover sensor detects the situation as a rollover.

Air bag inflation conditions


OUM038052R

Front air bags

Front air bags are designed to inflate in a frontal collision depending on the intensity, speed or angles of impact of the front collision.

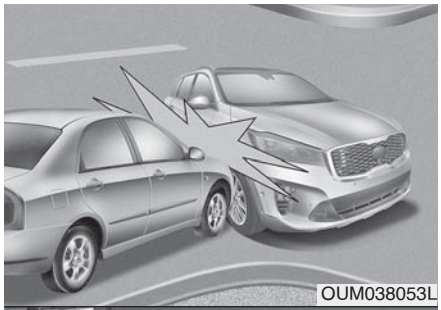
OUM038053L

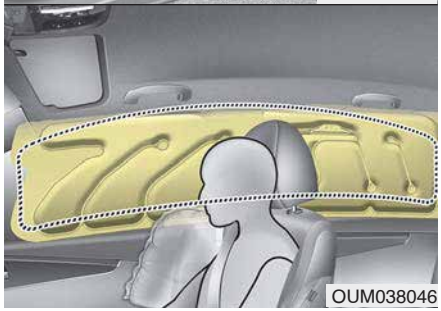
OUM038046

❊ The actual air bags in the vehicle may differ from the illustration.

Side and curtain air bags (if equipped)

Side and curtain air bags are designed to inflate when an impact is detected by side collision sensors depending on the strength, speed or angles of impact resulting from a side impact collision.

Although the front air bags (driver's and front passenger's air bags) are designed to inflate only in frontal collisions, they also may inflate in other types of collisions if the front impact sensors detect a sufficient impact. Side air bags (side and/or curtain air bags) are designed to inflate only in side impact collisions, but they may inflate in other collisions if the side impact sensors detect a sufficient impact.

If the vehicle chassis is impacted by bumps or objects on unimproved roads or sidewalks, air bags may deploy. Drive carefully on unimproved roads or on surfaces not designed for vehicle traffic to prevent unintended air bag deployment.

✻ NOTICE - if equipped with rollover sensor

Also, the side and curtain air bags are designed to inflate when a rollover is detected by a rollover sensor.

Air bag non-inflation conditions


OUM038055R

- In certain low-speed collisions the air bags may not deploy. The air bags are designed not to deploy in such cases because they may not provide benefits beyond the protection of the seat belts in such collisions.

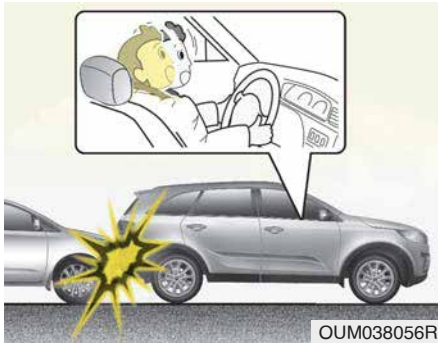
OUM038056R

- Air bags are not designed to inflate in rear collisions, because occupants are moved backward by the force of the impact. In this case, inflated air bags would not be able to provide any additional benefit.

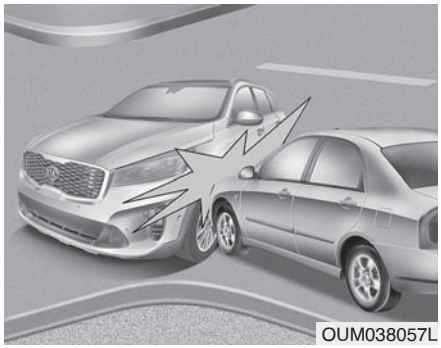
OUM038057L

- Front air bags may not inflate in side impact collisions, because occupants move to the direction of the collision, and thus in side impacts, front air bag deployment would not provide additional occupant protection.
- However, if equipped with side and curtain air bags, the air bags may inflate depending on the intensity, vehicle speed and angles of impact.

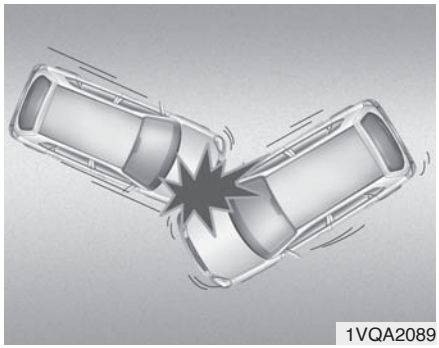
1VQA2089

- In an angled collision, the force of impact may direct the occupants in a direction where the air bags would not be able to provide any additional benefit, and thus the sensors may not deploy any air bags.

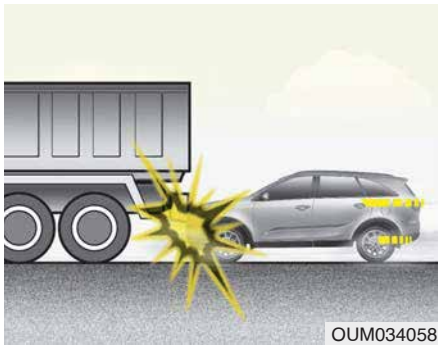
OUM034058

- Just before impact, drivers often brake heavily. Such heavy braking lowers the front portion of the vehicle causing it to “ride” under a vehicle with a higher ground clearance. Air bags may not inflate in this "under-ride" situation because deceleration forces that are detected by sensors may be significantly reduced by such “under-ride” collisions.

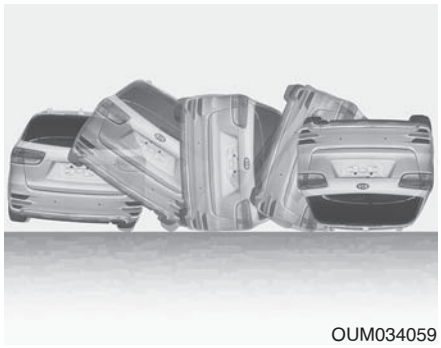
OUM034059

- Front air bags may not inflate in rollover accidents because front air bag deployment would not provide additional occupant protection.

✻ NOTICE - if equipped with rollover sensor

However, if equipped with side and curtain air bags, the air bags may inflate in a rollover, when it is detected by the rollover sensor.

✻ NOTICE - with rollover sensor

However, side and/or curtain air bags may inflate when the vehicle is rolled over by a side impact collision, if the vehicle is equipped with side air bags and curtain air bags.

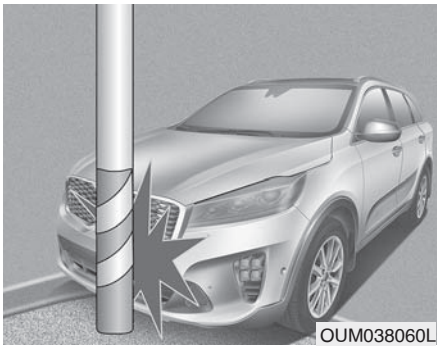
OUM038060L

- Air bags may not inflate if the vehicle collides with objects such as utility poles or trees, where the point of impact is concentrated to one area and the full force of the impact is not delivered to the sensors.

SRS Care

The SRS is virtually maintenance-free and so there are no parts you can safely service by yourself. If the SRS air bag warning light blinks or does not illuminate when the ignition switch is turned to the ON position, or if it illuminates whilst the vehicle is being driven, have the system inspected by a professional workshop. Kia recommends to visit an authorised Kia dealer/service partner.

⚠ WARNING

- **Modification to SRS components or wiring, including the addition of any kind of badges to the pad covers or modifications to the body structure, can adversely affect SRS performance and lead to possible injury.**
- **For cleaning the air bag pad covers, use only a soft, dry cloth or one which has been moistened with plain water.**

(Continued)

(Continued)

Solvents or cleaners could adversely affect the air bag covers and proper deployment of the system.

- **No objects should be placed over or near the air bag modules on the steering wheel, instrument panel, and the front passenger's panel above the glove box, because any such object could cause harm if the vehicle is in a crash severe enough to cause the air bags to inflate.**
- **If the air bags inflate, have the system replaced by a professional workshop. Kia recommends to visit an authorised Kia dealer/service partner.**
- **Do not tamper with or disconnect SRS wiring, or other components of the SRS system. Doing so could result in injury, due to accidental inflation of the air bags or by rendering the SRS inoperative.**

(Continued)

(Continued)

- **If components of the air bag system must be discarded, or if the vehicle must be scrapped, certain safety precautions must be observed. An authorised Kia dealer knows these precautions and can give you the necessary information. Failure to follow these precautions and procedures could increase the risk of personal injury.**
- **If your car was flooded and has soaked carpeting or water on flooring, you shouldn't try to start the engine; in this case, have your vehicle inspected by a professional workshop. Kia recommends to contact an authorised Kia dealer/service partner.**

Additional safety precautions

- **Never let passengers ride in the cargo area or on top of a folded-down back seat.** All occupants should sit upright, fully back in their seats with their seat belts on and their feet on the floor.
- **Passengers should not move out of or change seats whilst the vehicle is moving.** A passenger who is not wearing a seat belt during a crash or emergency stop can be thrown against the inside of the vehicle, against other occupants, or out of the vehicle.
- **Each seat belt is designed to restrain one occupant.** If more than one person uses the same seat belt, they could be seriously injured or killed in a collision.
- **Do not use any accessories on seat belts.** Devices claiming to improve occupant comfort or reposition the seat belt can reduce the protection provided by the seat belt and increase the chance of serious injury in a crash.
- **Passengers should not place hard or sharp objects between themselves and the air bags.** Carrying hard or sharp objects on your lap or in your mouth can result in injuries if an air bag inflates.
- **Keep occupants away from the air bag covers.** All occupants should sit upright, fully back in their seats with their seat belts on and their feet on the floor. If occupants are too close to the air bag covers, they could be injured if the air bags inflate.
- **Do not attach or place objects on or near the air bag covers.** Any object attached to or placed on the front or side air bag covers could interfere with the proper operation of the air bags.

- **Do not modify the front seats.** Modification of the front seats could interfere with the operation of the supplemental restraint system sensing components or side air bags.
- **Do not place items under the front seats.** Placing items under the front seats could interfere with the operation of the supplemental restraint system sensing components and wiring harnesses.
- **Never hold an infant or child on your lap.** The infant or child could be seriously injured or killed in the event of a crash. All infants and children should be properly restrained in appropriate child safety seats or seat belts in the rear seat.

⚠ WARNING

- **Sitting improperly or out of position can cause occupants to be shifted too close to a deploying air bag, strike the interior structure or be thrown from the vehicle resulting in serious injury or death.**
- **Always sit upright with the seatback in an upright position, centred on the seat cushion with your seat belt on, legs comfortably extended and your feet on the floor.**

Adding equipment to or modifying your air bag-equipped vehicle

If you modify your vehicle by changing your vehicle's frame, bumper system, front end or side sheet metal or ride height, this may affect the operation of your vehicle's air bag system.

Air bag warning label

■ Type A

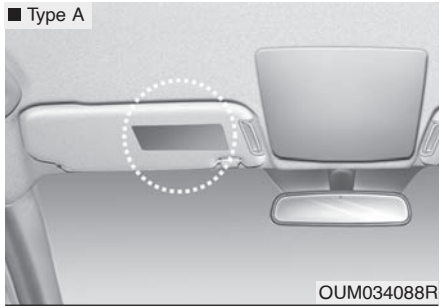

Air bag warning labels are attached to alert the passengers of the potential risk of the air bag system.

Note that these government warnings focus on the risk of children. We also want you to be aware of the risks which adults are exposed to that have been described in previous pages.

Features of your vehicle

Keys 4-3
- Record your key number 4-3
- Key operations 4-3
- Immobiliser system 4-4

Remote keyless entry 4-6
- Remote keyless entry system operations 4-6
- Smart key system operation 4-7
- Transmitter precautions 4-9

Theft-alarm system 4-11
- Armed stage 4-11

Door locks 4-14
- Operating door locks from inside the vehicle 4-15
- Deadlocks 4-17
- Door lock/unlock features 4-18
- Child-protector rear door lock 4-18

Tailgate 4-19
- Non-power tailgate 4-19

Windows 4-31
Bonnet 4-36
Fuel filler door 4-38
Panorama sunroof 4-40

Steering wheel 4-45
- Horn 4-46
- FLEX steering wheel 4-47

Mirrors 4-49
Instrument cluster 4-53
- LCD Display Control 4-60

LCD Display 4-60
Warning and indicator lights 4-77
- Warning lights 4-77
- Indicator Lights 4-106

Head Up Display (HUD) 4-88

Parking distance warning-Reverse (PDW-R) . . 4-93
- Operation of the parking distance warning

Parking distance warning (PDW) 4-97

Lighting 4-103
Wipers and washers 4-117
• Windscreen wipers 4-117
• Windscreen washers 4-118
• Rear window wiper and washer switch 4-118
Interior light 4-120
• Automatic turn off function 4-120
• Map lamp 4-120
• Room lamp 4-121
• Luggage lamp 4-122
• Glove box lamp 4-122
• Vanity mirror lamp 4-122
Welcome system 4-123
Automatic climate control system 4-125
• Automatic heating and air conditioning 4-126
• 3rd row air conditioning 4-132
• Climate control air filter 4-135
• Air Conditioning refrigerant label 4-135
• Checking the amount of air conditioner refrigerant and compressor lubricant 4-136
Windscreen defrosting and defogging 4-137
Storage compartment 4-141
Interior features 4-144
• Cigarette lighter 4-144
• Ashtray 4-144
• Cup holder 4-145
• Bottle holder 4-146
• Sunvisor 4-147
• Power outlet 4-147
• USB charger 4-149
• Wireless smart phone charging system 4-150
• Clothes hanger 4-113
• Floor mat anchor(s) 4-153
• Side curtain 4-154
• Luggage net holder 4-154
• Cargo security screen 4-155
Exterior features 4-157
• Roof rack 4-157

KEYS

Record your key number



The key code number is stamped on the key code tag attached to the key set. Should you lose your keys, Kia recommends to contact an authorised Kia dealer/service partner. Remove the key code tag and store it in a safe place. Also, record the key code number and keep it in a safe place (not in the vehicle).

Key operations

■ Smart Key



OUM046431L

- Used to start the engine.
- Used to lock and unlock the doors.
- Used to lock and unlock the glove box.

Smart key

To remove the mechanical key, press and hold the release button (1) and remove the mechanical key (2).

To reinstall the mechanical key, put the key into the hole and push it until a click sound is heard.

⚠ WARNING - Ignition key (smart key)

Leaving children unattended in a vehicle with the ignition key (smart key) is dangerous even if the key is not in the ignition or start button is ACC or ON position. Children copy adults and they could place the key in the ignition or press the start button. The ignition key (smart key) would enable children to operate power windows or other controls, or even make the vehicle move, which could result in serious bodily injury or even death. Never leave the keys in your vehicle with unsupervised children, when the engine is running.

⚠ WARNING

Kia recommends to use parts for replacement from an authorised Kia dealer/service partner. If an aftermarket key is used, the ignition switch may not return to ON after START. If this happens, the starter will continue to operate causing damage to the starter motor and possible fire due to excessive current in the wiring.

Immobiliser system (if equipped)

Your vehicle may be equipped with an electronic engine immobiliser system to reduce the risk of unauthorised vehicle use.

Your immobiliser system is comprised of a small transponder in the ignition key and electronic devices inside the vehicle.

With the immobiliser system, whenever you insert your ignition key into the ignition switch and turn it to ON or Whenever the engine start/stop button is changed to the ON position, it checks and determines and verifies if the ignition key is valid or not.

If the key is determined to be valid, the engine will start.

If the key is determined to be invalid, the engine will not start.

To activate the immobiliser system:

Turn the ignition key to the OFF position or change the engine start/stop button to the OFF position. The immobiliser system activates automatically. Without a valid ignition key for your vehicle, the engine will not start.

To deactivate the immobiliser system:

Insert the ignition key into the key cylinder and turn it to the ON position or change the engine start/stop button to the ON position.

⚠ WARNING

In order to prevent theft of your vehicle, do not leave spare keys anywhere in your vehicle. Your immobiliser password is a customer unique password and should be kept confidential. Do not leave this number anywhere in your vehicle.

✻ NOTICE

When starting the engine, do not use the key with other immobiliser keys around. Otherwise the engine may not start or may stop soon after it starts. Keep each key separately in order to avoid a starting malfunction.

⚠ CAUTION

Do not put metal accessories near the ignition switch. Metal accessories may interrupt the transponder signal and may prevent the engine from being started.

✻ NOTICE

If you need additional keys or lose your keys, Kia recommends to visit an authorised Kia dealer/service partner.

⚠ CAUTION

The transponder in your ignition key is an important part of the immobiliser system. It is designed to give years of trouble-free service, however you should avoid exposure to moisture, static electricity and rough handling. Immobiliser system malfunction could occur.

⚠ CAUTION

Do not change, alter or adjust the immobiliser system because it could cause the immobiliser system to malfunction. In this case, have the system serviced by a professional workshop. Kia recommends to visit an authorised Kia dealer/service partner.

Malfunctions caused by improper alterations, adjustments or modifications to the immobiliser system are not covered by your vehicle manufacturer warranty.

REMOTE KEYLESS ENTRY

Remote keyless entry system operations

■ Smart Key



OUM046433L

Lock (1)

All doors (and tailgate) are locked if the lock button is pressed.

If all doors (and tailgate) are closed, the hazard warning lights will blink once to indicate that all doors (and tailgate) are locked.

Unlock (2)

All doors (and tailgate) are unlocked if the unlock button is pressed.

The hazard warning lights will blink twice to indicate that all doors (and tailgate) are unlocked.

However, after pressing this button, the doors (and tailgate) will lock automatically unless you open any door within 30 seconds.

Tailgate unlock (3)

The tailgate is unlocked if the button is pressed for more than 1 second.

The hazard warning lights will blink twice to indicate that the tailgate is unlocked.

However, after pressing this button, the tailgate will lock automatically unless you open the tailgate within 30 seconds.

Also, once the tailgate is opened and then closed, the tailgate will lock automatically.

Smart key system operation (if equipped)


OXM043002

With a smart key, you can lock or unlock a door (and tailgate) and even start the engine without inserting the key.

The functions of the buttons on a smart key are similar to the remote keyless entry. (Refer to the “Remote keyless entry” in this chapter.)

Carrying the smart key, you may lock and unlock the vehicle doors (and tailgate). Also, you may start the engine. Refer to the following, for more details.

Locking


OUM048001R

Pressing the button of the front outside door handles with all doors (and tailgate) closed and any door unlocked, locks all the doors (and tailgate). The hazard warning lights will blink once to indicate that all doors (and tailgate) are locked. The button will only operate when the smart key is within 0.7 ~ 1m (28 ~ 39.3 in) from the outside door handle. If you want to make sure that a door has locked or not, you should check the door lock button inside the vehicle or pull the outside door handle.

Even though you press the button, the doors will not lock and the chime sounds if any of the following occurs:

- The smart key is in the vehicle.
- The ENGINE START/STOP button is in the ACC or ON position.
- Any door except the tailgate is opened.

Unlocking

Pressing the button of the front outside door handles with all doors (and tailgate) closed and locked, unlocks all the doors (and tailgate). The hazard warning lights will blink twice to indicate that all doors (and tailgate) are unlocked. The button will only operate when the smart key is within 0.7 ~ 1m (28 ~ 39.3 in) from the outside door handle.

When the smart key is recognized in the area of 0.7 ~ 1m (28 ~ 39.3 in) from the front outside door handle, other people can also open a door without possession of the smart key.

Tailgate unlocking

If you are within 0.7 ~ 1m (28 ~ 39.3 in) from the outside tailgate handle, with your smart key in possession, the tailgate will unlock and open when you press the tailgate handle switch.

The hazard warning lights will blink twice to indicate that the tailgate is unlocked.

Also, once the tailgate is opened and then closed, the tailgate will lock automatically.

Engine start

You can start the engine without inserting the key. For detailed information refer to “Starting the engine with a smart key” in chapter 6.

Restrictions in handling keys



When leaving keys with parking lot and valet attendants, the following procedures will ensure that your vehicle’s glove box compartment can not be opened in your absence.

1. Press and hold the release button (1) and remove the mechanical key (2).
2. Close and then lock the glove box using the mechanical key.
3. Leave the smart key with the attendant. The glove box can not be opened without the mechanical key.

Transmitter precautions

The transmitter will not work if any of the following occurs:

- The ignition key is in the ignition switch. (for folding key)
- Another vehicle's smart key is being operated close to your vehicle.
- You exceed the operating distance limit (about 10 m [30 feet]).
- The battery in the transmitter is weak.
- Other vehicles or objects may be blocking the signal.
- The weather is extremely cold.
- The transmitter is close to a radio transmitter such as a radio station or an airport which can interfere with normal operation of the transmitter.
- If the transmitter is in close proximity to your cell phone or smart phone, the signal from the transmitter could be blocked by normal operation of your cell phone or smart phone. This is especially important when the phone is active such as making call, receiving calls, text messaging, and/or sending/ receiving emails.

  Avoid placing the transmitter and your cell phone or smart phone in the same pants or jacket pocket and maintain adequate distance between the two devices.

When the transmitter does not work correctly, open and close the door with the mechanical key. If you have a problem with the transmitter Kia recommends to contact an authorised Kia dealer/service partner.

⚠ CAUTION

Keep the transmitter away from water or any liquid. If the keyless entry system is inoperative due to exposure to water or other liquids, it will not be covered by your manufacturer's vehicle warranty.

⚠ CAUTION

Changes or modifications not expressly approved by the party responsible for compliance could void the user's authority to operate the equipment. If the keyless entry system is inoperative due to changes or modifications not expressly approved by the party responsible for compliance, it will not be covered by your manufacturer's vehicle warranty.

■ Smart Key



OXM043005

A transmitter uses a 3 volt lithium battery which will normally last for several years. When replacement is necessary, use the following procedure.

1. Insert a slim tool into the slot and gently pry open the folding key centre cover or Pry open the rear cover of the smart key.
2. Replace the battery with a new battery (CR2032). When replacing the battery, make sure the battery position.
3. Install the battery in the reverse order of removal.

For transmitter replacement, Kia recommends to visit an authorised Kia dealer/service partner.

electricity. If you are unsure how to use or replace the battery, Kia recommends to contact an authorised Kia dealer/service partner.

- ***Using the wrong battery can cause the transmitter to malfunction. Be sure to use the correct battery.***
- ***To avoid damaging the transmitter, don't drop it, get it wet, or expose it to heat or sunlight.***

✻ NOTICE

An inappropriately disposed battery can be harmful to the environment and human health.
Dispose the battery according to your local law(s) or regulation.

THEFT-ALARM SYSTEM (IF EQUIPPED)

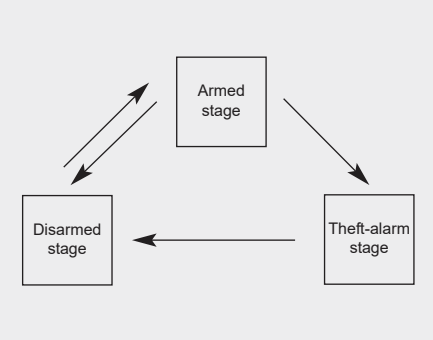

This system is designed to provide protection from unauthorised entry into the vehicle. This system is operated in three stages: the first is the "Armed" stage, the second is the "Theft-alarm" stage, and the third is the "Disarmed" stage. If triggered, the system provides an audible alarm with blinking of the hazard warning lights.

Armed stage

Park the vehicle and stop the engine. Arm the system as described below.

Using the folding key

1. Turn off the engine and remove the ignition key from the ignition switch.
2. Make sure that all doors, the engine bonnet and tailgate are closed and latched.
3. Lock the doors by pressing the lock button on the transmitter.

   After completion of the steps above, the hazard warning lights will blink once to indicate that the system is armed.

   If the tailgate or engine bonnet remains opened, the hazard warning lights will not operate and theft-alarm will not arm. After this, if the tailgate and engine bonnet are closed, the hazard warning lights will blink once and the theft-alarm will arm.

Using the smart key

1. Turn off the engine.
2. Make sure that all doors, the engine bonnet and tailgate are closed and latched.
3. • Lock the doors by pressing the button of the front outside door handle with the smart key in your possession.

   After completion of the steps above, the hazard warning lights will operate once to indicate that the system is armed.

   If the tailgate or engine bonnet remains opened, the hazard warning lights will not operate and theft-alarm will not arm. After this, if the tailgate and engine bonnet are closed, the hazard warning lights will blink once and the theft-alarm will arm.

- Lock the doors by pressing the lock button on the smart key.

  After completion of the steps above, the hazard warning lights will operate once to indicate that the system is armed.

  If the tailgate or engine bonnet remains opened, the hazard warning lights will not operate and theft-alarm will not arm. After this, if the tailgate and engine bonnet are closed, the hazard warning lights will blink once and the theft-alarm will arm.

Do not arm the system until all passengers have left the vehicle. If the system is armed whilst a passenger(s) remains in the vehicle, the alarm may be activated when the remaining passenger(s) leaves the vehicle. If any door (or tailgate) or engine bonnet is opened within 30 seconds after the system enters the armed stage, the system will be disarmed to prevent unnecessary alarm.

Theft-alarm stage

The alarm will be activated if any of the following occurs whilst the system is armed.

- A front or rear door is opened without using the transmitter.
- The tailgate is opened without using the transmitter.
- The engine bonnet is opened.

The horn will sound and the hazard warning lights will blink continuously for approximately 27 seconds. To turn off the system, unlock the doors with the transmitter.

Smart key

- The door unlock button is pressed.
- The button of the front outside door is pressed whilst carrying the smart key.
- The engine is started. (within 3 seconds)

After the doors are unlocked, the hazard warning lights will blink twice to indicate that the system is disarmed.

After pressing the unlock button, if any door (or tailgate) is not opened within 30 seconds, the system will be rearmed.

✻ NOTICE

- **Without smart key system**
  If the system is not disarmed with the transmitter, insert the key into the ignition switch and start the engine. Then the system will be disarmed.
- **With smart key system**
  If the system is not disarmed with the smart key, open the door with the mechanical key and start the engine. Then the system will be disarmed.
- **If you lose your keys, Kia recommends to visit an authorised Kia dealer/service partner.**

⚠ CAUTION

Do not change, alter or adjust the theft-alarm system because it could cause the theft-alarm system to malfunction.

Have the system serviced by a professional workshop. Kia recommends to visit an authorised Kia dealer/service partner.

Malfunctions caused by improper alterations, adjustments or modifications to the theft-alarm system are not covered by your vehicle manufacturer warranty.

DOOR LOCKS

Operating door locks from outside the vehicle

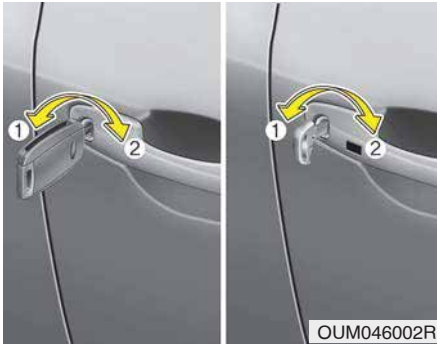

- Turn the key toward the rear of the vehicle to unlock (1) and toward the front of the vehicle to lock (2).
- If you lock/unlock the driver's door with a key, all vehicle doors will lock/unlock automatically.
- Doors can also be locked and unlocked with the transmitter.
- Once the doors are unlocked, they may be opened by pulling the door handle.
- When closing the door, push the door by hand. Make sure the doors are closed securely.

✻ NOTICE

- **In cold and wet climates, door lock and door mechanisms may not work properly due to freezing conditions.**
- **If the door is locked/unlocked multiple times in rapid succession with either the vehicle key or door lock switch, the system may stop operating temporarily in order to protect the circuit and prevent damage to system components.**

⚠ WARNING

- **If you don't close the door securely, the door may open again.**
- **Be careful that someone's body and hands are not trapped when closing the door.**

⚠ WARNING

If people must spend a longer time in the vehicle whilst it is very hot or cold outside, there is rick of injuries or danger to life. Do not lock the vehicle from the outside when there are people in it.

⚠ CAUTION

Do not frequently repeat opening and closing of doors, or apply excessive force to a door whilst the door closer is operating.

Operating door locks from inside the vehicle

With the door lock button

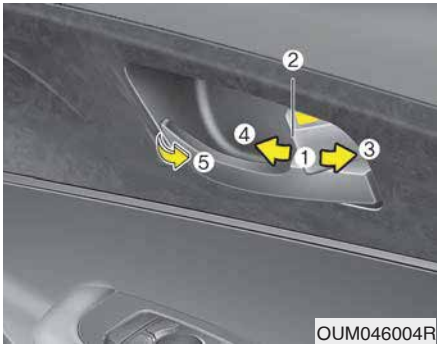

- To unlock a door, pull the door lock button (1) to the “Unlock” position (3). The red mark (2) on the button will be visible.
- To lock a door, push the door lock button (1) to the “Lock” position (4). If the door is locked properly, the red mark (2) on the door lock button will not be visible.
- To open a door, pull the door handle (5) outward.
- If the inner door handle of the driver’s (or front passenger’s) door is pulled when the door lock button is in the lock position, the button will unlock and the door will open. (if equipped)
- Front door cannot be locked if the ignition key is in the ignition switch (or if the smart key is in the vehicle) and the front door is opened.

⚠ WARNING - Door lock malfunction

If a power door lock ever fails to function whilst you are in the vehicle, try one or more of the following techniques to exit:

- **Operate the door unlock feature repeatedly (both electronic and manual) whilst simultaneously pulling on the door handle.**
- **Operate the other door locks and handles, front and rear.**
- **Lower a front window and use the key to unlock the door from outside.**
- **Move to the cargo area and open the tailgate.**

⚠ WARNING

Do not pull the inner door handle of driver’s(or passenger’s) door whilst the vehicle is moving.

With central door lock switch

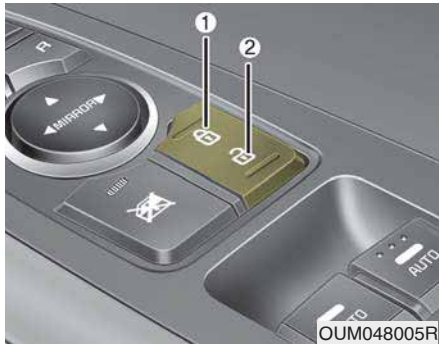

Operate by pressing the central door lock switch.

- When pressing the front portion (1) of the switch, all vehicle doors will lock.
- When pressing the rear portion (2) of the switch, all vehicle doors will unlock.
- If the key is in the ignition switch (or if the smart key is in the vehicle) and any door is opened, the doors will not lock even though the front portion (1) of the central door lock switch is pressed.

⚠ WARNING - Doors

- **The doors should always be fully closed and locked whilst the vehicle is in motion to prevent accidental opening of the door. Locked doors will also discourage potential intruders when the vehicle stops or slows down.**
- **Be careful when opening doors and watch for vehicles, motorcycles, bicycles or pedestrians approaching the vehicle in the path of the door. Opening a door when something is approaching can cause damage or injury.**

⚠ WARNING - Unlocked vehicles

Leaving your vehicle unlocked can invite theft or possible harm to you or others from someone hiding in your vehicle whilst you are gone. Always remove the ignition key, engage the parking brake, close all windows and lock all doors when leaving your vehicle unattended.

⚠ WARNING - Unattended children

An enclosed vehicle can become extremely hot, causing death or severe injury to unattended children or animals who cannot escape the vehicle. Furthermore, children might operate features of the vehicle that could injure them, or they could encounter other harm, possibly from someone gaining entry to the vehicle. Never leave children or animals unattended in your vehicle.

Deadlocks (if equipped)

Some vehicles are equipped with a deadlock system. Deadlocks prevent opening of a door from either inside or outside the vehicle once the deadlocks have been activated providing an additional measure of vehicle security.

To lock the vehicle using the deadlock function, the doors must be locked by using the transmitter or smart key. To unlock the vehicle, the transmitter or smart key must be used again.

⚠ WARNING

Do not lock the doors with the transmitter or the smart key with anybody left in the vehicle. The passenger in the vehicle cannot unlock the doors with the door lock button. For example, if the door is locked with the transmitter, the passenger in the vehicle cannot unlock the door without the transmitter.

Door lock/unlock features

Impact sensing door unlock system (if equipped)

All doors will automatically unlock when an impact causes the air bags to deploy.

Speed sensing door lock system (if equipped)

All doors will automatically lock after the vehicle speed exceeds 15 km/h.

You can activate or deactivate the auto door lock/unlock features in the vehicle. Refer to "User setting" in this chapter.

Child-protector rear door lock



The child safety lock is provided to help prevent children from accidentally opening the rear doors from inside the vehicle. The rear door safety locks should be used whenever children are in the vehicle.

1. Open the rear door.
2. Push the child safety lock located on the rear edge of the door to the lock ( ) position. When the child safety lock is in the lock position, the rear door will not open even though the inner door handle is pulled.
3. Close the rear door.

To open the rear door, pull the outside door handle.

Even though the doors may be unlocked, the rear door will not open by pulling the inner door handle (1) until the rear door child safety lock is unlocked.

⚠ WARNING - Rear door locks

If children accidentally open the rear doors whilst the vehicle is in motion, they could fall out and be severely injured or killed. To prevent children from opening the rear doors from the inside, the rear door safety locks should be used whenever children are in the vehicle.

TAILGATE

⚠ WARNING - Exhaust fumes

If you drive with the tailgate opened, you will draw dangerous exhaust fumes into your vehicle which can cause serious injury or death to vehicle occupants.

If you must drive with the tailgate opened, keep the air vents and all windows open so that additional outside air comes into the vehicle.

⚠ WARNING - Rear cargo area

Occupants should never ride in the rear cargo area where no restraints are available. To avoid injury in the event of an accident or sudden stops, occupants should always be properly restrained.

Non-power tailgate

Opening the tailgate



- The tailgate is locked or unlocked when all doors are locked or unlocked with the key, transmitter, smart key or central door lock/unlock switch.
- Only the tailgate is unlocked if the tailgate unlock button on the transmitter or smart key is pressed for approximately 1 second.
- If unlocked, the tailgate can be opened by pressing the handle and pulling it up.
- Once the tailgate is opened and then closed, the tailgate locks automatically. (All doors must be locked.)

✻ NOTICE

In cold and wet climates, door lock and door mechanisms may not work properly due to freezing conditions.

⚠ WARNING

The tailgate swings upward. Make sure no objects or people are near the rear of the vehicle when opening the tailgate.

⚠ CAUTION

Make certain that you close the tailgate before driving your vehicle. Possible damage may occur to the tailgate gas lifters and attaching hardware if the tailgate is not closed prior to driving.

Closing the tailgate


OUM048008L

Lower and push down the tailgate firmly. Make sure that the tailgate is securely latched.

⚠ WARNING

Make sure your hands, feet and other parts of your body are safely out of the way before closing the tailgate.

⚠ WARNING - Exhaust fumes

The tailgate lid should always be kept completely closed whilst the vehicle is in motion. If it is left open or ajar, exhaust gases may enter the car and serious illness or death may result.

⚠ CAUTION

Make sure nothing is near the tailgate latch and striker whilst closing the tailgate. It may damage the tailgate's latch.

Power tailgate (if equipped)



OUM048472R



OUM048011L

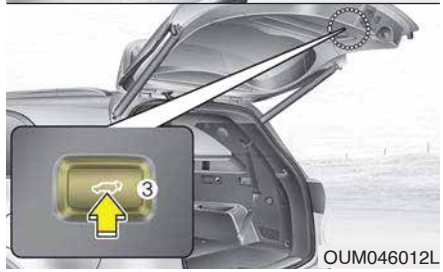

OUM046012L

(1) Power tailgate open/close button
(2) Power tailgate handle switch
(3) Power tailgate close button

✻ NOTICE

If ignition switch is ON position, the power tailgate can operate when the automatic shift lever is in P (Park) or manual shift lever is in N (Neutral).

⚠ WARNING

Never leave children or animals unattended in your vehicle. Children or animals might operate the power tailgate that could result in injury to themselves or others, or damage the vehicle.

✻ NOTICE

Do not put heavy stuffs on the power tailgate when you operate the power tailgate. Additional weight on tailgate could cause damages to the system.

⚠ WARNING



Make sure that there are no people or objects in the path of the power tailgate (or smart tailgate) prior to use. Serious injury, damage to the vehicle or damage to surrounding objects may result if contact with the power tailgate (or smart tailgate) occurs.

⚠ CAUTION

Do not close or open the power tailgate manually. This may cause damage to the power tailgate. If it is necessary to close or open the power tailgate manually when the battery is discharged or disconnected, do not apply excessive force.

⚠ WARNING

Make sure there are no people or objects around the trunk before opening or closing the power trunk. Wait until the trunk is open fully and stopped before loading or unloading cargo from the vehicle.

Opening the tailgate



OUM044300L

The power tailgate will open automatically by doing one of the following:

- Press the tailgate unlock button on the smart key for approximately one second.

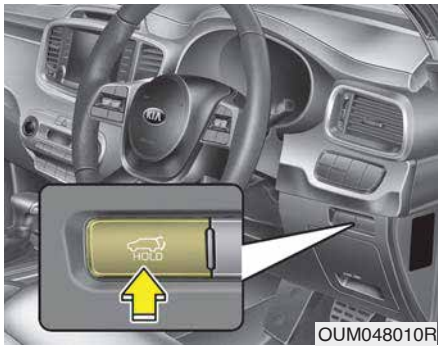

OUM048010R

Press the power tailgate open button for approximately one second.


OUM048011

- Press the tailgate handle switch carrying the smart key with you.

Closing the tailgate

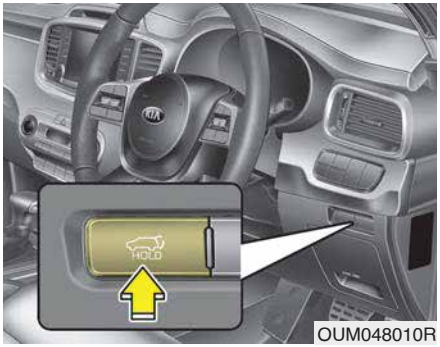

Press the power tailgate close button for approximately one second when the tailgate is opened.

The tailgate will close and lock automatically.



- Press the power tailgate close button for approximately one second when the tailgate is opened.

  The tailgate will close and lock automatically.

Power tailgate non-opening conditions

The power tailgate will not open or close automatically, when the vehicle is moving more than 3km/h (2mph).

⚠ WARNING

The chime will sound continuously if you drive over 3km/h (2mph) with the tailgate opened. Stop your vehicle immediately at a safe place and check if your tailgate is opened.

⚠ CAUTION

Do not operate the power tailgate more than 5 times continuously.

It may damage the power tailgate system. If you operate the power tailgate more than 5 times continuously, the chime will sound 3 times and the power tailgate will not operate. At this time, stop operating the tailgate and leave it for more than 1 minute.

✻ NOTICE

- **The power tailgate can be operated when the engine is not running. However the power tailgate operation consumes large amounts of vehicle electric power. To prevent the battery from being discharged, do not operate it excessively e.g.: more than approximately 10 times repeatedly.**
- **To prevent the battery from being discharged, do not leave the power tailgate in the open position for a long lime.**
- **Do not modify or repair any part of the power tailgate by yourself. Kia recommends to visit an authorised Kia dealer/service partner.**
- **When jacking up the vehicle to change a tyre or repair the vehicle, do not operate the power tailgate. This could cause the power tailgate to operate improperly.**
- **In cold and wet climates, the power tailgate may not work properly due to freezing conditions.**

Automatic reversal



During power opening and closing if the power tailgate is blocked by an object or part of the body, the power tailgate will detect the resistance.

- If the resistance is detected whilst opening the tailgate, it will stop and move in the opposite direction.
- If the resistance is detected whilst closing the tailgate, it will stop and move in the opposite direction.

However, if the resistance is weak such as from an object that is thin or soft, or the tailgate is near the latched position, the automatic stop and reversal may not detect the resistance.

If the automatic reversal feature operates continuously more than twice during opening or closing operation, the power tailgate may stop at that position. At this time, close the tailgate manually and operate the tailgate automatically again.

⚠ WARNING

- **Never intentionally place any object or part of your body in the path of the power tailgate to make sure the automatic reversal operates.**
- **Never operate power tailgate attached with any heavy objects (ex. Bicycles). It could damage the power tailgate.**

How to reset the power tailgate

If the battery has been discharged or disconnected, or if the related fuse has been replaced or disconnected, for the power tailgate to operate normally, reset the power tailgate as follow:

1. Automatic Transaxle :

   Put the shifte lever is in P (Park).
   Manual Transaxle :

   Put the shifte lever is in N (Neutral).
2. Whilst Pressing the tailgate close button, press the tailgate handle switch for more than 3 seconds. (the chime will sound)
3. Close the tailgate manually.

If the power tailgate does not work properly after the above procedure, have the system checked by a professional workshop. Kia recommends to visit an authorised Kia dealer/service partner.

✻ NOTICE

If the power tailgate does not operate normally, check again if the gear position is in right position.

Power tailgate speed adjustment

To adjust the power tailgate speed, go to User Settings mode and select Door – Power tailgate speed – Normal / Fast on the LCD display.

- If power tailgate function turns off or tailgate is not fully closed, you can not adjust the power tailgate speed.
- Initial speed of Power tailgate is set as “Fast”.

For more details, refer to “LCD Display” in this chapter.

Power tailgate opening height user setting



The driver may set the height of a fully opened tailgate by following the below instruction.

1. Position the tailgate manually to the height you prefer.
2. Press the tailgate close button for more than 3 seconds.
3. Close the tailgate manually after hearing the buzzer sound.

The tailgate will open to the height the driver has set up.

Smart tailgate (if equipped)

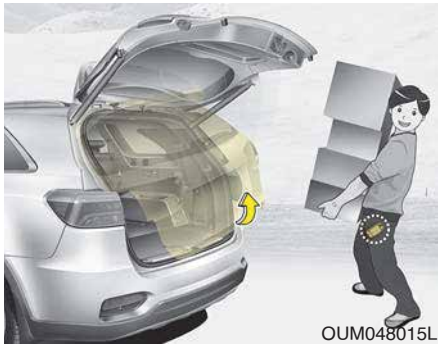

On the vehicle equipped with a smart key, the tailgate can be opened with no-touch activation using the Smart tailgate system.

How to use the Smart Tailgate

The tailgate can be opened with no-touch activation satisfying all the conditions below.

- After 15 seconds when all doors are closed and locked
- Positioned in the detecting area for more than 3 seconds.

✻ NOTICE

- **The Smart Tailgate does not operate when:**
  - **The smart key is detected within 15 seconds after the doors are closed and locked, and is continuously detected.**
  - **The smart key is detected within 15 seconds after the doors are closed and locked, and 1.5 m from the front door handles. (for vehicles equipped with Welcome Light)**
  - **A door is not locked or closed.**
  - **The smart key is in the vehicle.**

1. Setting

To activate the Smart Tailgate, go to User Settings Mode and select Smart Tailgate on the LCD display.

❈ For more details, refer to “LCD Display” in this chapter.

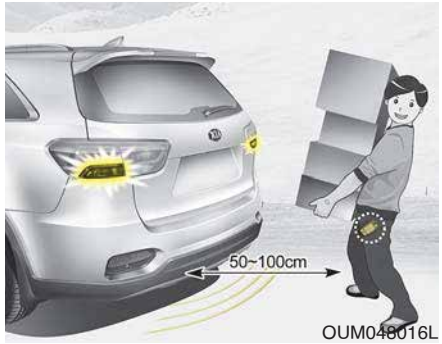

2. Detect and Alert

If you are positioned in the detecting area (50 ~100 cm behind the vehicle) carrying a smart key, the hazard warning lights will blink and chime will sound for about 3 seconds to alert you the smart key has been detected and the tailgate will open.

✻ NOTICE

Do not approach the detecting area if you do not want the tailgate to open. If you have unintentionally entered the detecting area and the hazard warning lights and chime starts to operate, leave the detecting area with the smart key. The tailgate will stay closed.


OUM048017L

3. Automatic opening

The hazard warning lights will blink and chime will sound 2 times and then the tailgate will slowly open.

⚠ WARNING

- **Make certain that you close the tailgate before driving your vehicle.**
- **Make sure there are no people or objects around the tailgate before opening or closing the tailgate.**
- **Make sure objects in the rear cargo area do not come out when opening the tailgate on the slope way. It may cause serious injury.**
- **Make sure to deactivate the Smart tailgate function when washing your vehicle.**

  Otherwise, the tailgate may open inadvertently.
- **The key should be kept out of reach of children. Children may inadvertently open the Smart Tailgate whilst playing around the rear area of the vehicle.**

How to deactivate the Smart Tailgate function using the smart key

■ Smart key



OUM046433L

1. Door lock
2. Door unlock
3. Tailgate open

If you press any button of the smart key during the Detect and Alert stage, the Smart Tailgate function will be deactivated.

Make sure to be aware of how to deactivate the Smart Tailgate function for emergency situations.

✻ NOTICE

- **If you press the door unlock button (2), the Smart Tailgate function will be deactivated temporarily. But, if you do not open any door for 30 seconds, the Smart Tailgate function will be activated again.**
- **If you press the tailgate open button (3) for more than 1 second, the tailgate opens.**
- **If you press the door lock button (1) or tailgate open button (3) when the Smart Tailgate function is not in the Detect and Alert stage, the Smart Tailgate function will not be deactivated.**
- **In case you have deactivated the Smart Tailgate function by pressing the smart key button and opened a door, the Smart Tailgate function can be activated again by closing and locking all doors.**

Detecting area



- The Smart Tailgate operates with a welcome alert if the smart key is detected within 50~100 cm from the tailgate.
- The alert stops at once if the smart key is positioned outside the detecting area during the Detect and Alert stage.

✻ NOTICE

- **The Smart Tailgate function will not work if any of the following occurs:**
  - **The smart key is close to a radio transmitter such as a radio station or an airport which can interfere with normal operation of the transmitter.**
  - **The smart key is near a mobile two way radio system or a mobile phone.**
  - **Another vehicle's smart key is being operated close to your vehicle.**
- **The detecting range may decrease or increase when :**
  - **One side of the tyre is raised to replace a tyre or to inspect the vehicle.**
  - **The vehicle is slantingly parked on a slope or unpaved road, etc.**

Emergency tailgate safety release


OUM044009L

Your vehicle is equipped with the emergency tailgate safety release lever located on the bottom of the tailgate. When someone is inadvertently locked in the luggage compartment. The tailgate can be opened by doing as follows:

1. Remove the cover.
2. Push the release lever to the right.
3. Push up the tailgate.

⚠ WARNING

- **For emergencies, be fully aware of the location of the emergency tailgate safety release lever in the vehicle and how to open the tailgate if you are accidentally locked in the luggage compartment.**
- **No one should be allowed to occupy the luggage compartment of the vehicle at any time. The luggage compartment is a very dangerous location in the event of a crash.**
- **Use the release lever for emergencies only. Use with extreme caution, especially whilst the vehicle is in motion.**

⚠ WARNING


OUM048468L

Do not grasp the part supporting the tailgate (gas lifter), as this may cause serious injury.

WINDOWS

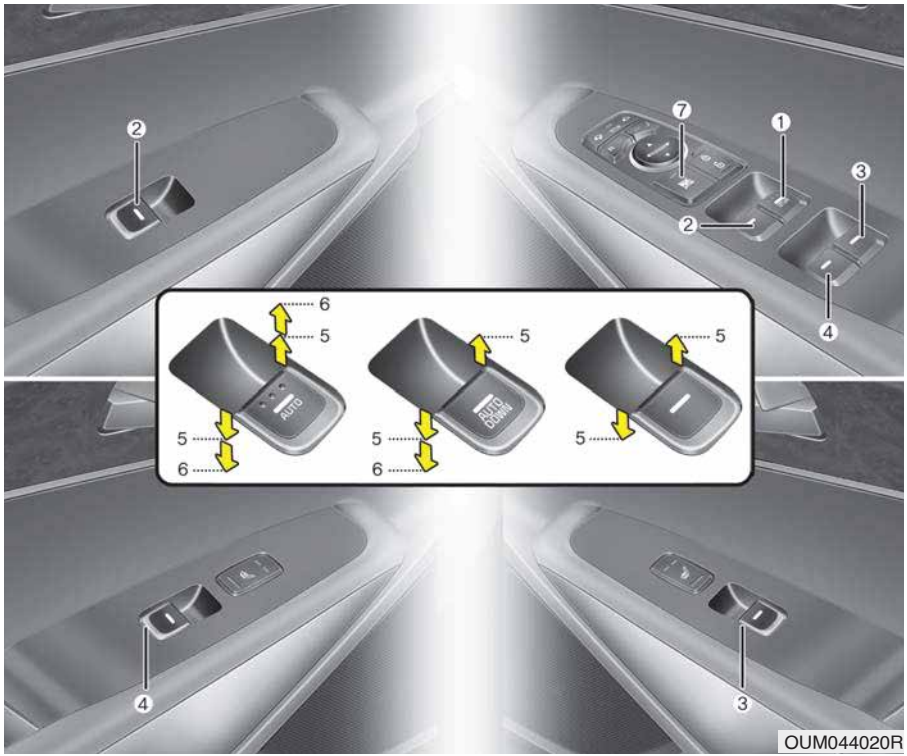

(1) Driver's door power window switch
(2) Front passenger's door power window switch
(3) Rear door (right) power window switch
(4) Rear door (left) power window switch
(5) Window opening and closing
(6) Automatic power window up*/ down*
(7) Power window lock switch

* if equipped

✻ NOTICE

In cold and wet climates, power windows may not work properly due to freezing conditions.

Power windows

The ignition switch must be in the ON position for power windows to operate.

Each door has a power window switch that controls the door's window. The driver has a power window lock button which can block the operation of rear passenger windows. The power windows can be operated for approximately 30 seconds after the ignition key is removed or turned to the ACC or LOCK position. However, if the front doors are opened, the power windows cannot be operated even within the 30 second period.

The driver's door has a master power window switch that controls all the windows in the vehicle.

If the window cannot be close because it is blocked by objects, remove the objects and close the window.

✻ NOTICE

Whilst driving with the rear windows down or with the sunroof (if equipped) in an open (or partially open position), your vehicle may demonstrate a wind buffeting or pulsation noise. This noise is a normal occurrence and can be reduced or eliminated by taking the following actions. If the noise occurs with one or both of the rear windows down, partially lower both front windows approximately 3 cm (1 inch). If you experience the noise with the sunroof open, slightly reduce the size of the sunroof opening.

⚠ WARNING

Do not install any accessories in the area of windows. It may impact jam protection.

Window opening and closing

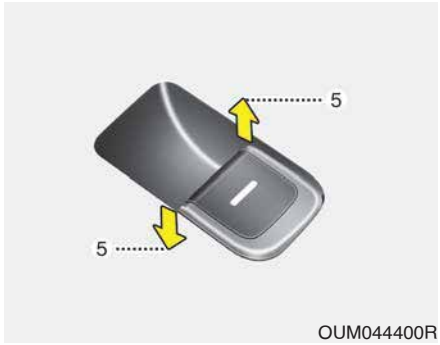

Type A

To open or close a window, press down or pull up the front portion of the corresponding switch to the first detent position (5).



Type B - Auto down window (if equipped)

Pressing the power window switch momentarily to the second detent position (6) completely lowers the window even when the switch is released. To stop the window at the desired position whilst the window is in operation, pull up the switch momentarily to the opposite direction of the window movement.



Type C - Auto up/down window (if equipped)

Pressing or pulling up the power window switch momentarily to the second detent position (6) completely lowers or raises the window even when the switch is released. To stop the window at the desired position whilst the window is in operation, pull up or press down and release the switch.

If the power window does not operate normally, the automatic power window system must be reset as follows:

1. Turn the ignition switch to the ON position.
2. Close the window and continue pulling up the power window switch for at least 1 second after the window is completely closed.

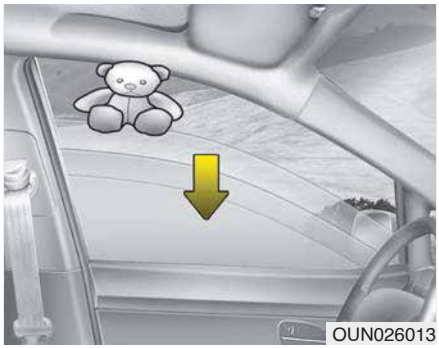

Automatic reversal (For Type C)

If the upward movement of the window is blocked by an object or part of the body, the window will detect the resistance and will stop upward movement. The window will then lower approximately 30 cm (11.8 in.) to allow the object to be cleared.

If the window detects the resistance whilst the power window switch is pulled up continuously, the window will stop upward movement then lower approximately 2.5 cm (1 in.).

And if the power window switch is pulled up continuously again within 5 seconds after the window is lowered by the automatic window reversal feature, the automatic window reversal will not operate.

✻ NOTICE

The automatic reverse feature for the window is only active when the "auto up" feature is used by fully pulling up the switch. The automatic reverse feature will not operate if the window is raised using the halfway position on the power window switch.

⚠ WARNING

Always check for obstructions before raising any window to avoid injuries or vehicle damage. If an object less than 4 mm (0.16 in.) in diameter is caught between the window glass and the upper window channel, the automatic reverse window may not detect the resistance and will not stop and reverse direction.

⚠ WARNING

The automatic reverse feature doesn't activate whilst resetting power window system. Make sure body parts or other objects are safely out of the way before closing the windows to avoid injuries or vehicle damage.

Power window lock button



The driver can disable the power window switches on the rear passengers' doors by pressing the power window lock switch to the lock position (pressed).

When the power window lock switch is pressed :

- The driver's master control can operate the front passenger's power window but cannot operate the rear passengers' power windows.
- The front passenger's control can operate the front passenger's power window.
- The rear passengers' control cannot operate the rear passengers' power window.

⚠ CAUTION

- ***To prevent possible damage to the power window system, do not open or close two windows or more at the same time. This will also ensure the longevity of the fuse.***
- ***Never try to operate the main switch on the driver's door and the individual door window switch in opposite directions at the same time. If this is done, the window will stop and cannot be opened or closed.***

⚠ WARNING - Windows

- **NEVER leave the keys in your vehicle with unsupervised children, when the engine is running.**

(Continued)

(Continued)

- **NEVER leave any child and animal unattended in the vehicle. Even very young children may inadvertently cause the vehicle to move, entangle themselves in the windows, or otherwise injure themselves or others.**
- **Always double check to make sure all arms, hands, head and other obstructions are safely out of the way before closing a window.**
- **Do not allow children play with the power windows. Keep the driver's door power window lock button in the LOCK position (pressed). Serious injury can result from unintentional window operation by the child.**
- **Do not extend heads or any limbs outside the window whilst the vehicle is in motion.**

BONNET

Opening the bonnet

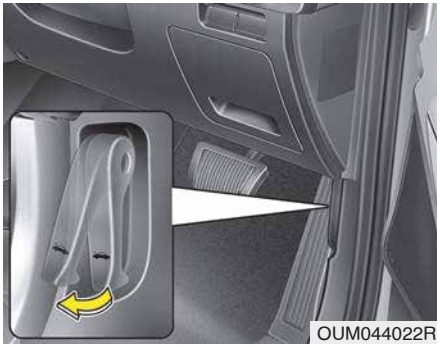
OUM044022R

1. Pull the release lever to unlatch the bonnet. The bonnet should pop open slightly.

⚠ WARNING

Open the bonnet after turning off the engine on a flat surface, shifting the shift lever to the P(Park) position for automatic transaxle and to the 1st(First) gear or R(Reverse) for manual transaxle, and setting the parking brake.



OUM048023L

2. Go to the front of the vehicle, raise the bonnet slightly, push the secondary latch (1) left side and lift the bonnet (2).
3. Raise the bonnet. It will completely rise by itself after it has been raised about halfway.

Bonnet open warning (if equipped)

■ Type A


OUM047331

■ Type B


OUM047332

The warning message (for Type B cluster) will appear on the LCD display when bonnet is open.

The warning chime will operate when the vehicle is being driven above 3 km/h with the bonnet open.

Closing the bonnet

1. Before closing the bonnet, check the following:
   - All filler caps in engine compartment must be correctly installed.
   - Gloves, rags or any other combustible material must be removed from the engine compartment.
2. Return the support rod to its clip to prevent it from rattling.
3. Lower the bonnet until it is about 30 cm above the closed position and let it drop. Make sure that it locks into place.
4. Check that the bonnet has engaged properly. If the bonnet can be raised slightly, it is not properly engaged.

   Open it again and close it with a little more force.

⚠ WARNING

- **Before closing the bonnet, ensure that all obstructions are removed from the bonnet opening. Closing the bonnet with an obstruction present in the bonnet opening may result in property damage or severe personal injury.**
- **Do not leave gloves, rags or any other combustible material in the engine compartment. Doing so may cause a heat-induced fire.**

⚠ WARNING

- **Always double check to be sure that the bonnet is firmly latched before driving away. If it is not latched, the bonnet could open whilst the vehicle is being driven, causing total loss of visibility, which might result in an accident.**
- **Do not move the vehicle with the bonnet raised. The view will be blocked and the bonnet could fall or be damaged.**

FUEL FILLER DOOR

Opening the fuel filler door

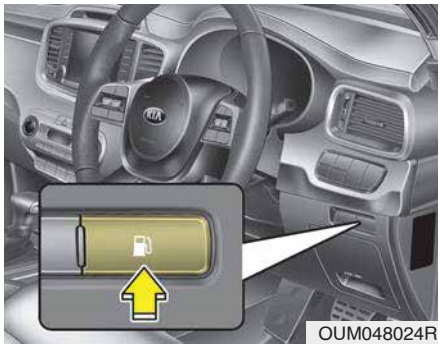

The fuel filler door must be opened from inside the vehicle by pushing the fuel filler door opener.

✻ NOTICE

If the fuel filler door does not open because ice has formed around it, tap lightly or push on the lid to break the ice and release the lid. Do not pry on the lid. If necessary, spray around the lid with an approved de-icer fluid (do not use radiator anti-freeze) or move the vehicle to a warm place and allow the ice to melt.



1. Stop the engine.
2. To open the fuel filler door, push the fuel filler door opener button.
3. Pull open the fuel filler door (1).
4. To remove the cap, turn the fuel filler cap (2) counterclockwise.
5. Refuel as needed.

Closing the fuel filler door

1. To install the cap, turn it clockwise until it “clicks”. This indicates that the cap is securely tightened.
2. Close the fuel filler door and push it lightly and make sure that it is securely closed.

⚠ WARNING - Refuelling

- **If pressurized fuel sprays out, it can cover your clothes or skin and subject you to the risk of fire and burns. Always remove the fuel cap carefully and slowly. If the cap is venting fuel or if you hear a hissing sound, wait until the condition stops before completely removing the cap.**
- **Do not "top off" after the nozzle automatically shuts off when refuelling.**
- **Always check that the fuel cap is installed securely to prevent fuel spillage in the event of an accident.**

⚠ WARNING - Refuelling dangers

Automotive fuels are flammable materials. When refuelling, please note the following guidelines carefully. Failure to follow these guidelines may result in severe personal injury, severe burns or death by fire or explosion.

- **Read and follow all warning posted at the gas station facility.**
- **Before refuelling note the location of the Emergency Petrol Shut-Off, if available, at the gas station facility.**
- **Before touching the fuel nozzle, you should eliminate potentially dangerous static electricity discharge by touching another metal part of the vehicle, a safe distance away from the fuel filler neck, nozzle, or other gas source.**

(Continued)

(Continued)

- **Do not get back into a vehicle once you have begun refuelling since you can generate static electricity by touching, rubbing or sliding against any item or fabric (polyester, satin, nylon, etc.) capable of producing static electricity. Static electricity discharge can ignite fuel vapours resulting in rapid burning. If you must re-enter the vehicle, you should once again eliminate potentially dangerous static electricity discharge by touching a metal part of the vehicle, away from the fuel filler neck, nozzle or other petrol source.**
- **When using an approved portable fuel container, be sure to place the container on the ground prior to refuelling. Static electricity discharge from the container can ignite fuel vapours causing a fire.**

(Continued)

(Continued)

Once refuelling has begun, contact with the vehicle should be maintained until the filling is complete.

Use only approved portable plastic fuel containers designed to carry and store petrol.

- **Do not use mobile phones whilst refuelling. Electric current and/or electronic interference from mobile phones can potentially ignite fuel vapours causing a fire.**
- **When refuelling, always shut the engine off. Sparks produced by electrical components related to the engine can ignite fuel vapours causing a fire. Once refuelling is complete, check to make sure the filler cap and filler door are securely closed, before starting the engine.**

(Continued)

(Continued)

- **DO NOT use matches or a lighter and DO NOT SMOKE or leave a lit cigarette in your vehicle whilst at a gas station especially during refuelling. Automotive fuel is highly flammable and can, when ignited, result in fire.**
- **If a fire breaks out during refuelling, leave the vehicle, and immediately contact the manager of the gas station and then contact the local fire department. Follow any safety instructions they provide.**

⚠ CAUTION

- ***Make sure to refuel your vehicle according to the "Fuel requirements" suggested in chapter 1.***
- ***If the fuel filler cap requires replacement, please make sure that you use parts designed for replacement in your vehicle.***

  An incorrect fuel filler cap can result in a serious malfunction of the fuel system or emission control system. For more detailed information, Kia recommends to contact an authorised Kia dealer/service partner.
- ***Do not spill fuel on the exterior surfaces of the vehicle. Any type of fuel spilled on painted surfaces may damage the paint.***
- ***After refuelling, make sure the fuel cap is installed securely to prevent fuel spillage in the event of an accident.***

Emergency fuel filler door release

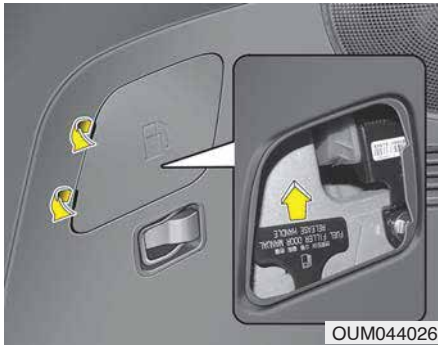

If the fuel filler door does not open using the remote fuel filler door release, you can open it manually. Remove the panel in the cargo area. Pull the handle out slightly.

⚠ CAUTION

Do not pull the handle excessively, otherwise the luggage compartment area trim or release handle may be damaged.

PANORAMA SUNROOF (IF EQUIPPED)


OUM044027

If your vehicle is equipped with a sunroof, you can slide or tilt your sunroof with the sunroof control lever located on the overhead console.

The sunroof can be operated for approximately 30 seconds after the ignition key is removed or turned to the ACC or LOCK position. However, if the front doors are opened, the sunroof cannot be opened even within the 30 seconds period.

- In cold and wet climates, the sunroof may not work properly due to freezing conditions.
- After the vehicle is washed or in a rainstorm, be sure to wipe off any water that is on the sunroof before operating it.

⚠ CAUTION - Sunroof control lever

Do not continue to move the sunroof control lever after the sunroof is fully opened, closed, or tilted. Damage to the motor or system components could occur.

⚠ CAUTION

Make sure the sunroof is fully closed when leaving your vehicle. If the sunroof is opened, rain or snow may leak through the sunroof and wet the interior as well as cause theft.

⚠ WARNING - Sunroof break

The sunroof, which is made of glass, may break if the sufficient impact is applied. In this case, in an accident, any improperly-belted occupant may be tossed out of the vehicle through the sunroof, possibly resulting injury. To minimise all the possible accident risk, all occupants must be properly belted and, in case of a child, be fastened in a proper child restraint.

⚠ WARNING

- **In order to prevent accidental operation of the sunroof, especially by a child, do not let a child operate the sunroof.**
- **Do not sit on the top of the vehicle. It may cause vehicle damage.**

Sunroof open warning



OUM044134

If the driver removes the ignition key (smart key: turns off the engine) when the sunroof is not fully closed, the warning chime will sound for approximately 7 seconds and a message will appear on the LCD display.

Close the sunroof securely when leaving your vehicle.

⚠ WARNING

- **Never adjust the sunroof or sunshade whilst driving. This could result in loss of control and an accident that may cause death, serious injury, or property damage.**
- **If you would like to carry items on the roof using a cross bar, do not operate the sunroof.**
- **When carrying cargo on the roof, do not load heavy items above the sunroof or glass roof.**
- **Do not allow children to operate the sunroof.**

⚠ CAUTION

Do not extend any luggage out side the sunroof whilst driving.

Sunshade



OUM044028

To open the sunshade

Pull the sunroof control lever backward to the 1st detent position.

To close the sunshade when the sunroof glass is closed

Push the sunroof control lever forward or pull it down to the 1st detent position.

To stop the sliding at any point, press the sunshade control switch momentarily.

✻ NOTICE

Wrinkles formed on the sunshade as material characteristic are normal.

⚠ CAUTION

- ***Do not pull or push the sunshade by hand. It could cause sunshade failure.***
- ***Close the sunroof when driving through dusty roads. Dust may cause a malfunction of the vehicle system.***

✻ NOTICE

Only the front glass of the panorama sunroof opens and closes.

Sliding the sunroof



When the sunshade is closed

Pull the sunroof control lever backward to the 2nd detent position, the sunshade and sunroof glass will slide all the way open. To stop the sunroof movement at any point, pull or push the sunroof control lever momentarily.

When the sunshade is opened

Pull the sunroof control lever backward to the 1st or 2nd detent position, the sunroof glass will slide all the way open. To stop the sunroof movement at any point, pull or push the sunroof control lever momentarily.

❉ The front part of the sunroof glass can only be opened and closed.

Tilting the sunroof



When the sunshade is closed

Push the sunroof control lever upward, the sunshade will slide halfway open then the sunroof glass will tilt.

To stop the sunroof movement at any point, pull or push the sunroof control lever momentarily.

When the sunshade is opened

Push the sunroof control lever upward, the sunroof glass will tilt.

To stop the sunroof movement at any point, pull or push the sunroof control lever momentarily.

Closing the sunroof

To close the sunroof glass with the sunshade

Push the sunroof control lever forward or downward to the 2nd detent position. The sunroof glass and sunshade will close automatically.

To stop the sunroof movement at any point, pull or push the sunroof control lever momentarily.

To close the sunroof glass only

Push the sunroof control lever forward or downward to the 1st detent position. The sunroof glass will close automatically.

To stop the sunroof movement at any point, pull or push the sunroof control lever momentarily.

Automatic reversal

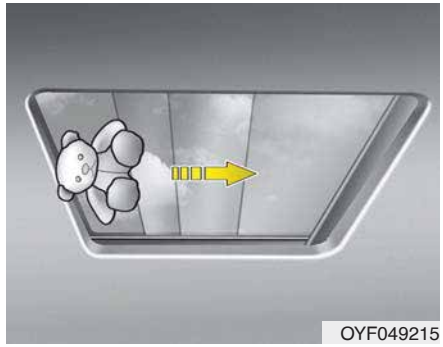

If an object or part of the body is detected whilst the sunroof glass or sunshade is closing automatically, it will reverse the direction, and then stop.

The auto reverse function does not work if a tiny obstacle is between the sliding glass or sunshade and the sunroof sash. You should always check that all passengers and objects are away from the sunroof before closing it.

Objects less than 4 mm (0.16 inch) in diameter caught between the sunroof glass and the front glass channel may not be detected by the automatic reverse glass and the glass will not stop and reverse direction.

⚠ WARNING - Sunroof

- **Be careful that no head, hands and body parts are obstructed by a closing sunroof.**
- **Do not extend the face, neck, arms or body outside the sunroof whilst driving.**
- **Make sure your hands and head are safely out of the way before closing a sunroof.**
- **A panorama sunroof is made of glass, therefore it may break in an accident. If you do not have your seat belt on, you may stick out of the broken glass and get injured or killed. For all passengers safety, have an appropriate protection on. (ex. seat belt, CRS, etc.)**

⚠ CAUTION

- ***Periodically remove any dirt that may accumulate on the guide rail.***
- ***If you drive with the sunroof opened right after a car wash or rain, water may get inside the vehicle.***

⚠ CAUTION - Sunroof motor damage

If you try to open the sunroof when the temperature is below freezing or when the sunroof is covered with snow or ice, the glass or the motor could be damaged.

Resetting the sunroof

Whenever the vehicle battery is disconnected or discharged, you must reset your sunroof system as follows:

1. Start the engine.
2. Close the sunshade and sunroof completely if opened.
3. Release the sunroof control lever.
4. Push the sunroof control lever forward in the direction of close until the sunshade open and sunroof glass moves a little. Then, release the lever.
5. Push the sunroof control lever forward in the direction of close, until the sunroof operates as follows again:

   GLASS CLOSE GLASS OPEN
   GLASS/SUNSHADE CLOSE

   Then, release the lever.

When this is complete, the sunroof system has been reset.

✻ NOTICE

If you do not reset the sunroof, it may not work properly.

STEERING WHEEL

Electric power steering (EPS) (if equipped)

The system assists you with steering the vehicle. If the engine is off or if the power steering system becomes inoperative, the vehicle may still be steered, but it will require increased steering effort.

Also, the steering effort becomes heavier as the vehicle's speed increases and becomes lighter as the vehicle's speed decreases for better control of the steering wheel.

Should you notice any change in the effort required to steer during normal vehicle operation, have the system checked by a professional workshop. Kia recommends to visit an authorised Kia dealer/service partner.

✻ NOTICE

The following symptoms may occur during normal vehicle operation:

- **The steering effort may be high immediately after placing the ignition switch or the Engine Start/Stop button in the ON position.**
  This happens as the system performs the EPS system diagnostics. When the diagnostics is completed, the steering wheel will return to its normal condition.
- **A click noise may be heard from the EPS relay after the ignition switch is placed to the ON or LOCK/OFF position (Without Smart key system).**
  A click noise may be heard from the EPS relay after the Engine Start/Stop button is in the ON or OFF position. (With Smart key system)
- **Motor noise may be heard when the vehicle is at a stop or at a low driving speed.**

(Continued)

(Continued)

- **When you operate the steering wheel in low temperature, abnormal noise may occur. If temperature rises, the noise will disappear. This is a normal condition.**
- **When the vehicle is stationary, if you turn the steering wheel all the way to the left or right continuously, the steering wheel effort increases. This is not a system malfunction. As time passes, the steering wheel effort will return to its normal condition.**

⚠ CAUTION

If the Electric Power Steering System does not operate normally, the warning light (⚠) will illuminate on the instrument cluster. The steering wheel may become difficult to control or operate. Take your vehicle to a professional workshop and have the system checked as soon as possible. Kia recommends to visit an authorised Kia dealer/service partner.

Tilt & telescopic steering

A tilt and telescopic steering wheel allows you to adjust the steering wheel before you drive. You can also raise it to give your legs more room when you exit and enter the vehicle.

The steering wheel should be positioned so that it is comfortable for you to drive, whilst permitting you to see the instrument panel warning lights and gauges.

⚠ WARNING

- **Never adjust the angle of the steering wheel whilst driving. You may lose steering control and cause severe personal injury, death or accidents.**
- **After adjusting, push the steering wheel both up and down to be certain it is locked in position.**



To change the steering wheel angle, pull down the lock release lever (1), adjust the steering wheel to the desired angle (2) and height (3), then pull up the lock-release lever (4) to lock the steering wheel in place. Be sure to adjust the steering wheel to the desired position before driving.

✻ NOTICE

After adjustment, sometimes the lock-release lever may not lock the steering wheel.
It is not a malfunction. This occurs when gear teeth meet head-on. In this case, adjust the steering wheel again and then lock the steering wheel.

Horn



To sound the horn, press the area indicated by the horn symbol on your steering wheel (see illustration). The horn will operate only when this area is pressed. Check the horn regularly to be sure it operates properly.

⚠ CAUTION

- ***Do not strike the horn severely to operate it, or hit it with your fist. Do not press on the horn with a sharp-pointed object.***
- ***When cleaning the steering wheel, do not use an organic solvent such as thinner, benzene, alcohole and petrol. Doing so may damage the steering wheel.***

FLEX steering wheel (if equipped)

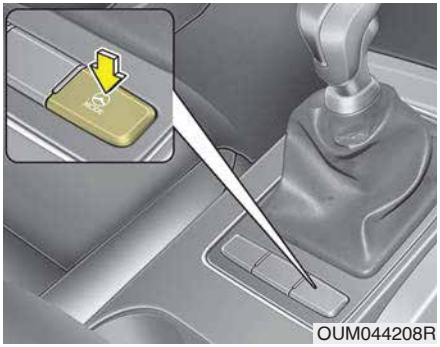
OUM044208R

The FLEX steering wheel controls steering effort as driver's preference or road condition.

You can select the desired steering mode by pressing the steering mode button.

When the steering mode button is pressed, the selected steering mode will appear on the LCD display.

If the steering mode button is pressed within 4 seconds, the steering mode will change.

If the steering wheel mode button is not pressed for about 4 seconds, the LCD display will change to the previous screen.

Normal mode



OUM044267L

The normal mode offers medium steering effort.

Sport mode



OUM044268L

The steering wheel becomes heavier. The sport mode is usually used when driving in highway.

⚠ CAUTION

- ***For your safety, if you press the steering mode button whilst operating the steering wheel, the LCD display will change, but the steering effort will not change immediately. After operating the steering wheel, the steering effort will change automatically to the selected mode.***
- ***Be careful when changing the steering mode whilst driving.***
- ***When the electronic power steering is not working properly, the flex steering wheel will not work.***

MIRRORS

Inside rearview mirror

Adjust the rearview mirror so that the centre view through the rear window is seen. Make this adjustment before you start driving.

⚠ WARNING - Rear visibility

Do not place objects in the rear seat or cargo area which would interfere with your vision through the rear window.

⚠ WARNING

Do not adjust the rearview mirror whilst the vehicle is moving. This could result in loss of control, and an accident which could cause death, serious injury or property damage.

⚠ WARNING

Do not modify the inside mirror and don't install a wide mirror. It could result in injury, during an accident or deployment of the air bag.

Electrochromic mirror (ECM) (if equipped)



The electric rearview mirror automatically controls the glare from the headlights of the vehicles behind you in nighttime or low light driving conditions. The sensor (3) mounted in the mirror senses the light level around the vehicle, and automatically controls the headlight glare from the vehicles behind you.

When the engine is running, the glare is automatically controlled by the sensor mounted in the rearview mirror.

Whenever the shift lever is shifted into reverse (R), the mirror will automatically go to the brightest setting in order to improve the drivers view behind the vehicle.

⚠ CAUTION

When cleaning the mirror, use a paper towel or similar material dampened with glass cleaner. Do not spray glass cleaner directly on the mirror. It may cause the liquid cleaner to enter the mirror housing.

To operate the electric rearview mirror:

- The mirror defaults to the ON position whenever the ignition switch is turned on.
- Press the ON/OFF button (1) to turn the automatic dimming function off. The mirror indicator light (2) will turn off.

  Press the ON/OFF button (1) to turn the automatic dimming function on. The mirror indicator light (2) will illuminate.

Outside rearview mirror

Be sure to adjust the mirror angles before driving.

Your vehicle is equipped with both left-hand and right-hand outside rearview mirrors. The mirrors can be adjusted remotely with the remote switch. The mirror heads can be folded back to prevent damage during an automatic car wash or when passing through a narrow street.

⚠ WARNING - Rearview mirrors

- **The outside rearview mirror is convex. Objects seen in the mirror are closer than they appear.**
- **Use your interior rearview mirror or direct observation to determine the actual distance of following vehicles when changing lanes.**

⚠ CAUTION

Do not scrape ice off the mirror face; this may damage the surface of the glass. If ice should restrict the movement of the mirror, do not force the mirror for adjustment. To remove ice, use a deicer spray, or a sponge or soft cloth with warm water.

⚠ CAUTION

If the mirror is jammed with ice, do not adjust the mirror by force. Use an approved spray de-icer (not radiator antifreeze) to release the frozen mechanism or move the vehicle to a warm place and allow the ice to melt.

⚠ WARNING

Do not adjust or fold the outside rearview mirrors whilst the vehicle is moving. This could result in loss of control, and an accident which could cause death, serious injury or property damage.

Remote control

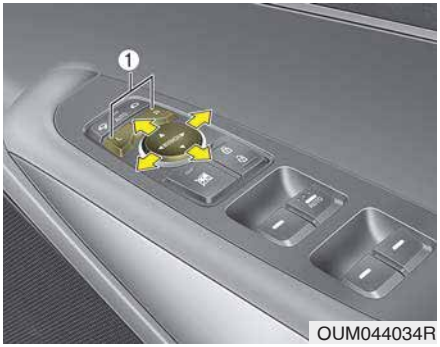

The electric remote control mirror switch allows you to adjust the position of the left and right outside rearview mirrors. To adjust the position of either mirror, press the R or L button (1) to select the right side mirror or the left side mirror, then press a corresponding point (▲) on the mirror adjustment control to position the selected mirror up, down, left or right.

After adjustment, press the R or L button again to prevent the inadvertent adjustment.

⚠ CAUTION

- ***The mirrors stop moving when they reach the maximum adjusting angles, but the motor continues to operate whilst the switch is pressed. Do not press the switch longer than necessary, the motor may be damaged.***
- ***Do not attempt to adjust the outside rearview mirror by hand. Doing so may damage the parts.***

Folding the outside rearview mirror



Manual type

To fold the outside rearview mirror, grasp the housing of the mirror and then fold it toward the rear of the vehicle.

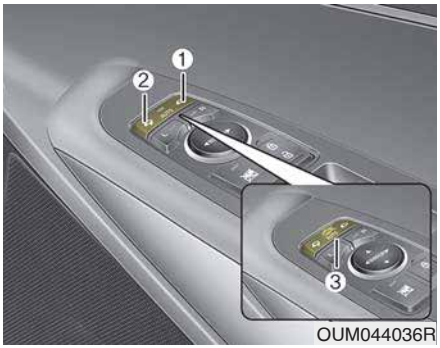

Electric type

The outside rearview mirror can be folded or unfolded by pressing the switch as below.

Right (1) : The mirror will unfold.

Left (2) : The mirror will fold.

Centre (AUTO, 3) :

The mirror will fold or unfold automatically as follows:

- Without smart key system
  - The mirror will fold or unfold when the door is locked or unlocked by the transmitter.
- With smart key system
  - The mirror will fold or unfold when the door is locked or unlocked by the smart key.
  - The mirror will fold or unfold when the door is locked or unlocked by the button on the outside door handle.
  - The mirror will unfold when you approach the vehicle (all doors closed and locked) with a smart key in possession. (if equipped)

⚠ CAUTION

The electric type outside rearview mirror operates even though the ignition switch is in the LOCK position. However, to prevent unnecessary battery discharge, do not adjust the mirrors longer than necessary whilst the engine is not running.

⚠ CAUTION

In case it is an electric type outside rearview mirror, don't fold it by hand.

It could cause motor failure.

INSTRUMENT CLUSTER

■ **Type A**



❈ The actual may differ from the illustration.

1. Tachometer
2. Speedometer
3. Engine coolant temperature gauge
4. Fuel gauge
5. LCD display
6. Warning and indicator lights

❈ The actual cluster in the vehicle may differ from the illustration.
For more details, refer to the “Gauges” in this chapter.

OUM048565L/OUM048566L

Instrument Cluster Control

Adjusting Instrument Cluster Illumination (if equipped)

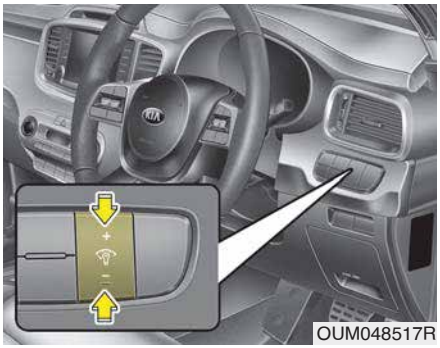

⚠ WARNING

Never adjust the instrument cluster whilst driving. This could result in loss of control and lead to an accident that may cause death, serious injury, or property damage.

The brightness of the instrument panel illumination is changed by pressing the illumination control button (“+” or “-”) when the ignition switch or Engine Start/Stop button is ON, or the tail lights are turned on.



- If you hold the illumination control button (“+” or “-”), the brightness will be changed continuously.
- If the brightness reaches to the maximum or minimum level, an alarm will sound.

LCD Display Control



OUM048209L

The LCD display modes can be changed by using the control buttons on the steering wheel.

(1) : MODE button for change the LCD MODES

(2) ▲/▼ : MOVE scroll switch for select the items

(3) OK : SET/RESET button for set the items or reset the items

❊ For the LCD modes, refer to “LCD Display” in this chapter.

■ Type A (km/h)



OUM044103

The speedometer indicates the speed of the vehicle and is calibrated in kilometers per hour (km/h).

Tachometer

■ Petrol
• Type A



OYP044103K/OYP044103N

The tachometer indicates the approximate number of engine revolutions per minute (rpm).

Use the tachometer to select the correct shift points and to prevent lugging and/or over-revving the engine.

⚠ CAUTION

Do not operate the engine within the tachometer's RED ZONE. This may cause severe engine damage.

Engine Coolant Temperature Gauge

■ Type A

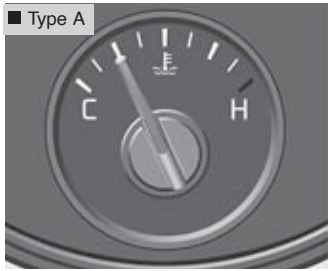

This gauge indicates the temperature of the engine coolant when the ignition switch or Engine Start/Stop button is ON.

⚠ CAUTION

If the gauge pointer moves beyond the normal range area toward the "130 or H" position, it indicates overheating that may damage the engine.

Do not continue driving with an overheated engine. If your vehicle overheats, refer to "If the Engine Overheats" in chapter 7.

⚠ WARNING

Never remove the radiator cap when the engine is hot. The engine coolant is under pressure and could severely burn. Wait until the engine is cool before adding coolant to the reservoir.

Fuel Gauge

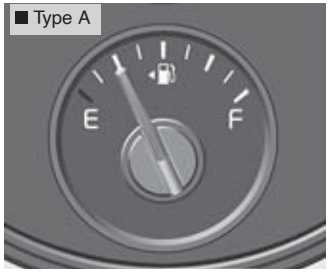

This gauge indicates the approximate amount of fuel remaining in the fuel tank.

✻ NOTICE

- **The fuel tank capacity is given in chapter 9.**
- **The fuel gauge is supplemented by a low fuel warning light, which will illuminate when the fuel tank is nearly empty.**
- **On inclines or curves, the fuel gauge pointer may fluctuate or the low fuel warning light may come on earlier than usual due to the movement of fuel in the tank.**

⚠ WARNING - Fuel Gauge

Running out of fuel can expose vehicle occupants to danger.

You must stop and obtain additional fuel as soon as possible after the warning light comes on or when the gauge indicator comes close to the "0 or E (Empty)" level.

⚠ CAUTION

Avoid driving with a extremely low fuel level. Running out of fuel could cause the engine to misfire damaging the catalytic converter.

Odometer

■ Type A



OUM048453L

■ Type B

The odometer Indicates the total distance that the vehicle has been driven and should be used to determine when periodic maintenance should be performed.

- Odometer range : 0 ~ 1,599,999 km or 0 ~ 999,999 mi.

Outside Temperature Gauge

■ Type A



OUM048454

■ Type B

This gauge indicates the current outside air temperatures by 1°C (1°F).

- Temperature range : -40°C ~ 85°C (-40°F ~ 211°F)

The outside temperature on the display may not change immediately like a general thermometer to prevent the driver from being inattentive.

The temperature unit can be changed by using the “User Settings” mode of the LCD display.

❈ For more details, refer to “LCD Display” in this chapter.

Icy Road Warning Light (if equipped)



OUM068039L

This warning light is to warn the driver the road may be icy.

When the following conditions occur, the warning light (including Outside Temperature Gauge) blinks 5 times and then illuminates.

- The temperature on the Outside Temperature Gauge is below approximately 4°C (39°F).

Transaxle Shift Indicator

Automatic Transaxle Shift Indicator (if equipped)

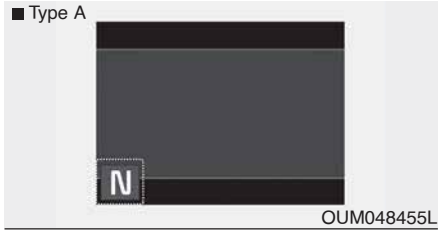

OUM048455L

This indicator displays which automatic transaxle shift lever is selected.

- Park : P
- Reverse : R
- Neutral : N
- Drive : D
- Sports Mode :
  - Type A : 1, 2, 3, 4, 5, 6
  - Type B : 1, 2, 3, 4, 5, 6, 7, 8

■ Type A



OUM048456L

LCD DISPLAY (IF EQUIPPED)

LCD Modes

Modes	Symbol	Explanation
Trip Computer		This mode displays driving information like the tripmeter, fuel economy, and so on. ❊ For more details, refer to “Trip Computer” in this chapter
User Settings		On this mode, you can change settings of the doors, lamps and so on.

❊ For controlling the LCD modes, refer to “LCD Display Control” in this chapter.

Trip computer mode

■ Type A

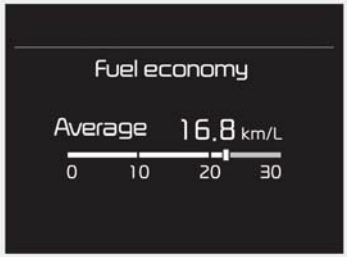

OCK047113L

This mode displays driving information like the tripmeter, fuel economy, and so on.

❊ For more details, refer to “Trip Computer” in this chapter.

■ AWD AUTO



OUM048493

■ AWD LOCK



OUM048505L

Assist mode displays the state of below systems.

- In AWD AUTO MODE (if equipped), the cluster displays the traction force distribution status of front-wheels and rear-wheels, but in AWD LOCK MODE (if equipped), the cluster doesn’t display the status.

Service mode



OUM048466L

When Service Required is set, the remaining distance/period to drive appears on the LCD screen.

From the point at which the remaining distance to drive amounts to 1,500km or the remaining period amounts to 3 days, Service Required message automatically displays and remained on LCD screen for a number of seconds every time the engine start/stop button is ON.

With Service Required in place, Service Required Alarm message pops up when an aggregated amount of miles/time driven reaches a certain point.

With Service Required mode, press OK button for more than 1 sec. The values will return to initial setting values.

✻See "Service Interval" in User Settings Mode in this chapter for further information about Service Required Setting.

✻Service Required Setting

Battery Cable Disconnection, Fuse Switch OFF or Service Required Setting values (an amount of miles/time driven) can be randomly changed. In such cases, re-enter Service Required Setting values.

Master warning mode (if equipped)

- This warning light informs the driver the following situations

- LED head lamp malfunction (if equipped)
- Lamp malfunction
- High Beam Assist malfunction (if equipped)

The Master Warning Light illuminates if one or more of the above warning situations occur.

If the warning situation is solved, the master warning light will be turned off.

Distance to empty

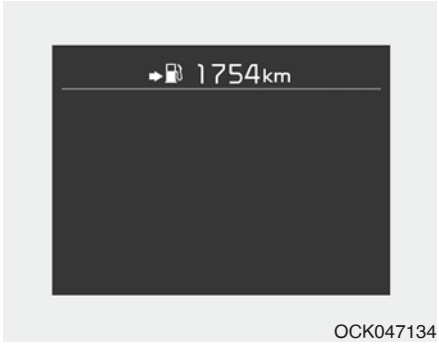

OCK047134

- The distance to empty is the estimated distance the vehicle can be driven with the remaining fuel.
  - Distance range: 1 ~ 1,999 km or 1 ~ 1,999 mi
- If the estimated distance is below 1 km (1 mi.), the trip computer will display “---” as distance to empty.

✻ NOTICE

- **If the vehicle is not on level ground or the battery power has been interrupted, the distance to empty function may not operate correctly.**
- **The distance to empty may differ from the actual driving distance as it is an estimate of the available driving distance.**
- **The trip computer may not register additional fuel if less than 6 litres (1.6 gallons) of fuel are added to the vehicle.**
- **The fuel economy and distance to empty may vary significantly based on driving conditions, driving habits, and condition of the vehicle.**

Trip modes (Trip computer)

The trip computer is a microcomputer-controlled driver information system that displays information related to driving.

✻ NOTICE

Some driving information stored in the trip computer (for example Average Fuel Economy) resets if the battery is disconnected.

Trip modes

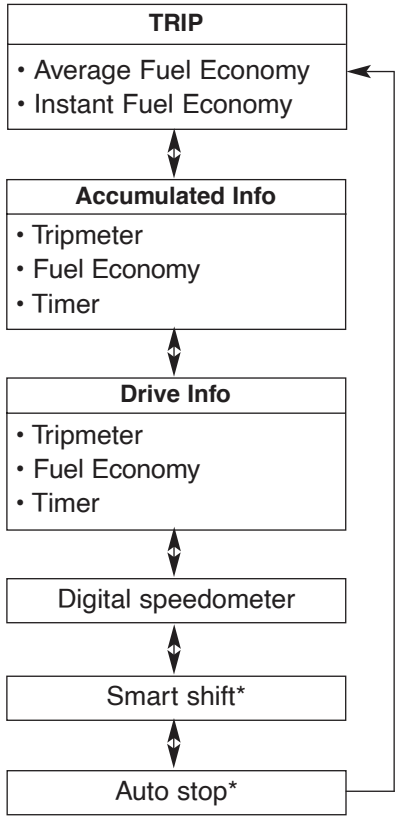

* : if equipped

To change the trip mode, scroll the MOVE scroll switch (▲/▼) in the trip computer mode.

Fuel Economy

■ Type A

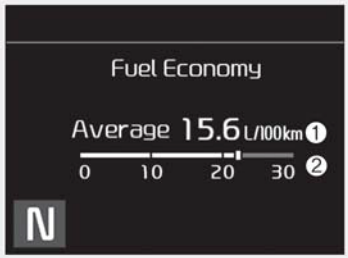

OCK047141L

■ Type B

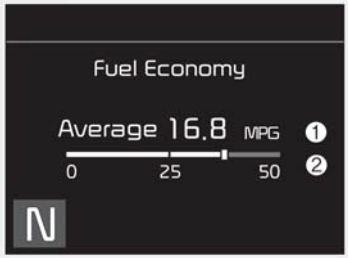

OUM048296R

Average Fuel Economy (1)

- The average fuel economy is calculated by the total driving distance and fuel consumption since the last average fuel economy reset.
  - Fuel economy range: 0.0 ~ 99.9 km/L, L/100km or MPG
- The average fuel economy can be reset both manually and automatically.

Manual reset

To clear the average fuel economy manually, press the OK button (reset) on the steering wheel for more than 1 second when the average fuel economy is displayed.

Automatic reset

To make the average fuel economy be reset automatically whenever refuelling, select the “Fuel economy auto reset” mode in User Setting menu of the LCD display (Refer to “LCD Display”).

- OFF - You may set to default manually by using the trip switch reset button.
- When driving - The vehicle will automatically set to default once 4 hours pass after the Engine Start/Stop Button or ignition switch is in the ACC or OFF position.
- When refuelling - After refuelling more than 6 litres and driving over 1km/h, the vehicle will reset to default automatically.

✻ NOTICE

The average fuel economy is not displayed for more accurate calculation if the vehicle does not drive more than 10 seconds or 50 meters (0.03 miles) since the Engine Start/Stop Button is turned to ON.

Instant Fuel Economy (2)

- This mode displays the instant fuel economy during the last few seconds when the vehicle speed is more than 10 km/h (6.2 MPH).
  - Fuel economy range: 0.0 ~ 30 km/L, L/100km or 0.0 ~ 50.0 MPG

Accumulated driving information mode

■ Type A



OCK047143L

■ Type B



OUM048297R

Displays accumulated information starting from mileage/fuel efficiency/time default point.

- Accumulated information is calculated after the vehicle has run for more than 300 meters.
- If you press “OK” button for more than 1 second after the Cumulative Information is displayed, the information will be reset.
- If the engine is running, even when the vehicle is not in motion, the information will be accumulated.

One time driving information mode

■ Type A



OCK047144L

■ Type B



OUM048298R

The vehicle will display Driving Information once per one ignition cycle.

- Fuel efficiency is calculated after the vehicle has run for more than 300 meters.
- The Driving Information will be reset 4 hours after ignition has been turned off. So, when the vehicle ignition is turned on within 4 hours, the information will not be reset.
- If you press “OK” button for more than 1 second after the Driving Information is displayed, the information will be reset.
- If the engine is running, even when the vehicle is not in motion, the information will be accumulated.

Digital speedometer

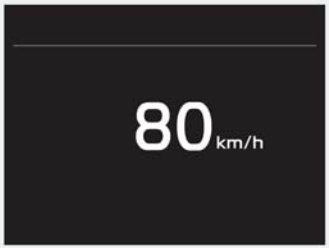

OYG046156

This mode displays the current speed of the vehicle.

Smart Shift(if equipped)



OCK047145L

This mode displays the currently selected drive mode.

User Settings Mode

Description



OUM048574R

On this mode, you can change setting of the doors, lamps, and so on.

⚠ WARNING

Do not adjust the User Setting whilst driving. You may lose your steering control and cause severe personal injury or accidents.

Shift to P to edit settings



OUM068043L

This warning message appears if you try to adjust the User Settings whilst driving.

For your safety, change the User Settings after parking the vehicle, applying the parking brake and moving the shift lever to P (Park).

Door/Tailgate

- Automatic Lock :
  - Disable : The auto door lock operation will be deactivated.
  - Enable on Speed : All doors will be automatically locked when the vehicle speed exceeds 15km/h (9.3mph).
  - Enable on Shift : All doors will be automatically locked if the automatic transaxle shift lever is shifted from the P (Park) position to the R (Reverse), N(Neutral), or D (Drive) position.
- Automatic Unlock :
  - Disable : The auto door unlock operation will be cancelled.
  - Vehicle Off : All doors will be automatically unlocked when the Engine Star/Stop Button or ignition switch is set to the OFF position.
  - Driver Door Unlock : All doors will be automatically unlocked when the driver's door is opened.
  - On Shift to P : All doors will be automatically unlocked if the automatic transaxle shift lever is shifted to the P (Park) position.
- Horn Feedback
  - When turned on, a sound (horn) will be output when the doors become locked.
- Two Press Unlock (if equipped) :
  - If this item is checked, the two press unlock will be activated.
- Power Tailgate (if equipped)
  - If this item is checked, the power tailgate function will be activated.

❉For more details, refer to "Power Tailgate" in this chapter.

- Power Tailgate Speed (if equipped) :
  - To adjust the power tailgate speed. (Normal/Fast)

❉For more details, refer to "Power tailgate" in this chapter.

- Smart Tailgate (if equipped)

- If this item is checked, the smart tailgate function will be activated.

  If the power tailgate function is not activated, you cannot activate this function.

❉For more details, refer to "Smart Tailgate" in this chapter.

Light

- One Touch Turn Signal :
  - Off: The one touch turn signal function will be deactivated.
  - 3, 5, 7 Flashes : The lane change signals will blink 3, 5 or 7 times when the turn signal lever is moved slightly.

❉For more details, refer to "Light" in this chapter.

- Head Lamp Delay :
  - If this item checked, the head lamp delay function will be activated.

- Parking Distance Warning Volume (if equipped) :
  - Adjust the Park Assist System volume. (Level 1 ~ 3)

※For more details, refer to “Parking distance warning” in this chapter.

- Welcome Sound (if equipped) :
  - If this item checked, the welcome sound function will be activated.

Convenience

- Seat Easy Access (if equipped)
  - Off : The seat easy access function will be deactivated.
  - Normal/Extended : When you turn off the engine, the driver’s seat will automatically move rear 7.6 cm (Enhanced) for you to enter or exit the vehicle more comfortably.

  If you change the Engine Start/Stop Button from OFF position to the ACC position, the driver’s seat will return to the original position.

※For more details, refer to “Driver Position Memory System” in chapter 3.

- Welcome Mirror/Light (if equipped) :
  - If this item checked, the welcome Mirror/light function will be activated.

- Wireless charging system(if equipped) :
  - If this item checked, the wireless charging system function will be activated.

- Wiper/Light Display (if equipped) : If this item checked, the Wiper/Light Display will be activated.

- Gear Position Pop-up (if equipped) : If this item checked, the gear position pop-up display will be activated.

- Icy road warning (if equipped) : If this item checked, the Icy road warning display will be activated.

Service interval

- Enable Service Interval

  To activate or deactivate the service interval function.

- Adjust Interval

  To adjust the interval by mileage- and period.

- Reset

  To reset the service interval function.

Other features

- Fuel Economy Reset
  - Off : The average fuel economy will not reset automatically whenever refuelling.
  - After Ignition : The average fuel economy will reset automatically whenever it has passed 4 hours after turning OFF the engine.
  - After Refuelling: The average fuel economy will reset automatically when refuelling.

❊For more information, refer to “Trip Computer” in this chapter.

- Speedometer subscale (for Type B cluster) : If this item checked, speedometer subscale will be displayed.
- Fuel Economy Unit
  - Choose the fuel economy unit. (Km/L, L/100Km)

Language

Choose the language

Reset

You can reset the menus in the User Settings Mode. All menus in the User Settings Mode are initialized, except language and service interval.

Warning Messages (if equipped)

Shift to P (for smart key system and automatic transaxle)

- This warning message illuminates if you try to turn off the engine without the shift lever in P (Park) position.
- At this time, the Engine Start/Stop Button turns to the ACC position (If you press the Engine Start/Stop Button once more, it will turn to the ON position).

Low Key Battery (for smart key system)

- This warning message illuminates if the battery of the smart key is discharged when the Engine Start/Stop Button changes to the OFF position.

Press START button whilst turning wheel (for smart key system)

- This warning message illuminates if the steering wheel does not unlock normally when the Engine Start/Stop Button is pressed.
- It means that you should press the Engine Start/Stop Button whilst turning the steering wheel right and left.

Steering wheel unlocked (for smart key system)

- This warning message illuminates if the steering wheel does not lock when the Engine Start/Stop Button changes to the OFF position.

Check steering wheel lock system (for smart key system)

- This warning message illuminates if the steering wheel does not lock normally when the Engine Start/Stop Button changes to the OFF position.

Press brake pedal to start engine (for smart key system and automatic transaxle)

- This warning message illuminates if the Engine Start/Stop Button changes to the ACC position twice by pressing the button repeatedly without depressing the brake pedal.
- It means that you should depress the brake pedal to start the engine.

Press clutch pedal to start engine (for smart key system and manual transaxle)

- This warning message illuminates if the Engine Start/Stop Button changes to the ACC position twice by pressing the button repeatedly without depressing the clutch pedal.
- It means that you should depress the clutch pedal to start the engine.

Key not in vehicle (for smart key system)

- This warning message illuminates if the smart key is not in the vehicle when you press the Engine Start/Stop Button.
- It means that you should always have the smart key with you.

Key not detected (for smart key system)

- This warning message illuminates if the smart key is not detected when you press the Engine Start/Stop Button.

Press start button again (for smart key system)

- This warning message illuminates if you can not operate the Engine Start/Stop Button when there is a problem with the Engine Start/Stop Button system.
- It means that you could start the engine by pressing the Engine Start/ Stop Button once more.
- If the warning illuminates each time you press the Engine Start/Stop Button, have the vehicle inspected by a professional workshop. Kia recommends to visit an authorised Kia dealer/service partner.

Press start button with key (for smart key system)

- This warning message illuminates if you press the Engine Start/Stop Button whilst the warning message “Key not detected” is illuminating.
- At this time, the immobiliser indicator light blinks.

Check BRAKE SWITCH fuse (for smart key system and automatic transaxle)

- This warning message illuminates if the brake switch fuse is disconnected.
- It means that you should replace the fuse with a new one. If that is not possible, you can start the engine by pressing the Engine Start/Stop Button for 10 seconds in the ACC position.

Shift to P or N to start engine (for smart key system and automatic transaxle)

- This warning message illuminates if you try to start the engine with the shift lever not in the P (Park) or N (Neutral) position.

✻ NOTICE

You can start the engine with the shift lever in the N (Neutral) position. But, for your safety, we recommend that you start the engine with the shift lever in the P (Park) position.

Key not detected (for smart key system)

- This warning message illuminates if the smart key is not detected when you press the Engine Start/Stop Button.

Press start button again (for smart key system)

- This warning message illuminates if you can not operate the Engine Start/Stop Button when there is a problem with the Engine Start/Stop Button system.
- It means that you could start the engine by pressing the Engine Start/ Stop Button once more.
- If the warning illuminates each time you press the Engine Start/Stop Button, have the vehicle inspected by a professional workshop. Kia recommends to visit an authorised Kia dealer/service partner.

Press start button with key (for smart key system)

- This warning message illuminates if you press the Engine Start/Stop Button whilst the warning message “Key not detected” is illuminating.
- At this time, the immobiliser indicator light blinks.

Check BRAKE SWITCH fuse (for smart key system and automatic transaxle)

- This warning message illuminates if the brake switch fuse is disconnected.
- It means that you should replace the fuse with a new one. If that is not possible, you can start the engine by pressing the Engine Start/Stop Button for 10 seconds in the ACC position.

Shift to P or N to start engine (for smart key system and automatic transaxle)

- This warning message illuminates if you try to start the engine with the shift lever not in the P (Park) or N (Neutral) position.

✻ NOTICE

You can start the engine with the shift lever in the N (Neutral) position. But, for your safety, we recommend that you start the engine with the shift lever in the P (Park) position.

Door, Bonnet, Tailgate Open



OUM048133

- It means that any door, bonnet, or tailgate is open.

Sunroof Open (if equipped)



OUM048135

- This warning message illuminates if you turn off the engine and then open the driver's door when the sunroof is open.

Align steering wheel

- This warning message illuminates if you start the engine when the steering wheel is turned to more than 90 degrees to the left or right.
- It means that you should turn the steering wheel and make the angle of the steering wheel be less than 30 degrees.

Low Washer Fluid (if equipped)

- This warning message illuminates on the service reminder mode if the washer fluid level in the reservoir is nearly empty.
- It means that you should refill the washer fluid.

Turn on FUSE SWITCH (if equipped)

- This warning message illuminates if the fuse switch under the steering wheel is OFF.
- It means that you should turn the fuse switch on.

❈For more details, refer to “Fuses” in chapter 8.

Check headlights (if equipped)

This warning message illuminates if there is a malfunction (burned-out bulb or circuit malfunction) with the head lights (high and low beam). In this case, have your vehicle inspected by a professional workshop. Kia recommends to visit an authorised Kia dealer/service partner.

✻ NOTICE

- **When replacing the bulb, use the same wattage bulb.**
  For more information, refer to “BULB WATTAGE” in chapter 9.
- **If the different wattage bulb is equipped with the vehicle, this warning message is not displayed.**

Check high beam assist system (if equipped)

- This warning message illuminates if the high beam assist system has a malfunction.

In this case, have the vehicle inspected by a professional workshop. Kia recommends to visit an authorised Kia dealer/service partner.

Low Fuel

- This warning message illuminates if the fuel tank is nearly empty.
  - When the low fuel level warning light is illuminates.

  Add fuel as soon as possible.

WARNING AND INDICATOR LIGHTS

Warning lights

✻ NOTICE - Warning lights

Make sure that all warning lights are OFF after starting the engine. If any light is still ON, this indicates a situation that needs attention.

Air bag Warning Light



This warning light illuminates:

- Once you set the ignition switch or Engine Start/Stop Button to the ON position.
  - It illuminates for approximately 6 seconds and then goes off.
- When there is a malfunction with the SRS.

  In this case, have the vehicle inspected by a professional workshop. Kia recommends to visit an authorised Kia dealer/service partner.

Seat Belt Warning Light



This warning light informs the driver that the seat belt is not fastened.

❈ For more details, refer to the “Seat Belts” in chapter 3.

Parking Brake & Brake Fluid Warning Light



This warning light illuminates:

- Once you set the ignition switch or Engine Start/Stop Button to the ON position.
  - It illuminates for approximately 3 seconds
  - It remains on if the parking brake is applied.
- When the parking brake is applied.
- When the brake fluid level in the reservoir is low.
  - If the warning light illuminates with the parking brake released, it indicates the brake fluid level in reservoir is low.

If the brake fluid level in the reservoir is low:

1. Drive carefully to the nearest safe location and stop your vehicle.
2. With the engine stopped, check the brake fluid level immediately and add fluid as required (For more details, refer to “Brake Fluid” in chapter 8). Then check all brake components for fluid leaks. If any leak on the brake system is still found, the warning light remains on, or the brakes do not operate properly, do not drive the vehicle.

In this case, have the vehicle towed to a professional workshop and inspected. Kia recommends to visit an authorised Kia dealer/service partner.

Dual-diagonal braking system

Your vehicle is equipped with dual-diagonal braking systems. This means you still have braking on two wheels even if one of the dual systems should fail.

With only one of the dual systems working, more than normal pedal travel and greater pedal pressure are required to stop the vehicle.

Also, the vehicle will not stop in as short a distance with only a portion of the brake system working.

If the brakes fail whilst you are driving, shift to a lower gear for additional engine braking and stop the vehicle as soon as it is safe to do so.

⚠ WARNING - Parking Brake & Brake Fluid Warning Light

Driving the vehicle with a warning light ON is dangerous. If the Parking Brake & Brake Fluid Warning Light illuminates with the parking brake released, it indicates that the brake fluid level is low.

In this case, have the vehicle inspected by a professional workshop. Kia recommends to visit an authorised Kia dealer/service partner.

Anti-lock Brake System (ABS) Warning Light



This warning light illuminates:

- Once you set the ignition switch or Engine Start/Stop Button to the ON position.
  - It illuminates for approximately 3 seconds and then goes off.
- When there is a malfunction with the ABS (The normal braking system will still be operational without the assistance of the anti-lock brake system).

  In this case, have the vehicle inspected by a professional workshop. Kia recommends to visit an authorised Kia dealer/service partner.

Electronic Brake force Distribution (EBD) System Warning Light



These two warning lights illuminate at the same time whilst driving:

- When the ABS and regular brake system may not work normally.

  In this case, have the vehicle inspected by a professional workshop. Kia recommends to visit an authorised Kia dealer/service partner.

⚠ WARNING - Electronic Brake force Distribution (EBD) System Warning Light

When both ABS and Parking Brake & Brake Fluid Warning Lights are on, the brake system will not work normally and you may experience an unexpected and dangerous situation during sudden braking.

In this case, avoid high speed driving and abrupt braking.

Have the vehicle inspected by a professional workshop as soon as possible. Kia recommends to visit an authorised Kia dealer/service partner.

✻ NOTICE - Electronic Brake force Distribution (EBD) System Warning Light

When the ABS Warning Light is on or both ABS and Parking Brake & Brake Fluid Warning Lights are on, the speedometer, odometer, or trip-meter may not work. Also, the EPS Warning Light may illuminate and the steering effort may increase or decrease.
In this case, have the vehicle inspected by a professional workshop as soon as possible.
Kia recommends to visit an authorised Kia dealer/service partner.

Electronic Power Steering (EPS) Warning Light (if equipped)



This warning light illuminates:

- Once you set the ignition switch or Engine Start/Stop Button to the ON position.
  - This indicator light comes on after the ignition key is turned to the ON position and then goes out after approximately 3 seconds.
- When there is a malfunction with the EPS.

  In this case, have the vehicle inspected by a professional workshop. Kia recommends to visit an authorised Kia dealer/service partner.

Malfunction Indicator Lamp (MIL)



This warning light illuminates:

- Once you set the ignition switch or Engine Start/Stop Button to the ON position.

  - It remains on until the engine is started.

- When there is a malfunction with the emission control system.

  In this case, have the vehicle inspected by a professional workshop. Kia recommends to visit an authorised Kia dealer/service partner.

⚠ CAUTION - Malfunction Indicator Lamp (MIL)

Driving with the Malfunction Indicator Lamp (MIL) on may cause damage to the emission control systems which could effect drivability and/or fuel economy.

⚠ CAUTION - Petrol Engine

If the Malfunction Indicator Lamp (MIL) illuminates, potential catalytic converter damage is possible which could result in loss of engine power.

In this case, have the vehicle inspected by a professional workshop as soon as possible. Kia recommends to visit an authorised Kia dealer/service partner.

Charging System Warning Light



This warning light illuminates:

- Once you set the ignition switch or Engine Start/Stop Button to the ON position.

  - It remains on until the engine is started.

- When there is a malfunction with either the alternator or electrical charging system.

If there is a malfunction with either the alternator or electrical charging system:

1. Drive carefully to the nearest safe location and stop your vehicle.
2. Turn the engine off and check the alternator drive belt for looseness or breakage.

   If the belt is adjusted properly, there may be a problem in the electrical charging system.

   In this case, have the vehicle inspected by a professional workshop as soon as possible.

   Kia recommends to visit an authorised Kia dealer/service partner.

Engine Oil Pressure Warning Light



This warning light illuminates:

- Once you set the ignition switch or Engine Start/Stop Button to the ON position.
  - It remains on until the engine is started.
- When the engine oil pressure is low.

If the engine oil pressure is low:

1. Drive carefully to the nearest safe location and stop your vehicle.
2. Turn the engine off and check the engine oil level (For more details, refer to “Engine Oil” in chapter 8). If the level is low, add oil as required.

   If the warning light remains on after adding oil or if oil is not available, have the vehicle inspected by a professional workshop as soon as possible. Kia recommends to visit an authorised Kia dealer/service partner.

Pressure Warning Light

If the engine does not stop immediately after the Engine Oil Pressure Warning Light is illuminated, severe damage could result.

If the warning light stays on whilst the engine is running, it indicates that there may be serious engine damage or malfunction. In this case,

1. ***Stop the vehicle as soon as it is safe to do so.***
2. ***Turn off the engine and check the oil level. If the oil level is low, fill the engine oil to the proper level.***
3. ***Start the engine again. If the warning light stays on after the engine is started, turn the engine off immediately. In this case, have the vehicle inspected by a professional workshop. Kia recommends to visit an authorised Kia dealer/service partner.***

Engine Oil Level Warning Light (if equipped)



This warning light illuminates:

- Once you set the ignition switch or Engine Start/Stop Button to the ON position
  - It remains on until the engine is started.
- When the engine oil level should be checked.

If the engine oil level is low:

1. Drive carefully to the nearest safe location and stop your vehicle.
2. Turn the engine off and check the engine oil level (For more details, refer to “Engine Oil” in chapter 8). If the level is low, Slowly pour the recommended oil little by little into a funnel. (Oil refill capacity : approximately 0.6 ~ 1.6 l)

   Use only the specified engine oil. (Refer to “Recommended lubricants and capacities” in Chapter 9.)

   Do not overfill the engine oil to ensure the oil level is not above F mark on the dipstick.

   If the warning light remains on after adding oil or if oil is not available, have the vehicle inspected by a professional workshop as soon as possible. Kia recommends to visit an authorised Kia dealer/service partner.

✻ NOTICE

- **If you travel approximately 50 km ~100 km after the engine warms up, after adding the engine oil, the warning light will go off (for Petrol engine).**
- **Open and close the bonnet (Diesel engine only), or cycle the ignition from OFF to ON 3 times within 10 seconds, the warning light will go off immediately. However, when you turn off the warning light without adding the engine oil, the light will come on again after travelling approximately 50 ~ 100 km after the engine warms up.**

Low Fuel Level Warning Light



This warning light illuminates:

When the fuel tank is nearly empty.

If the fuel tank is nearly empty:

Add fuel as soon as possible.

⚠ CAUTION - Low Fuel Level

Driving with the Low Fuel Level warning light on or with the fuel level below “0 or E” can cause the engine to misfire and damage the catalytic converter (if equipped).

⚠ CAUTION - Fuel Filter Warning Light

- ***When the Fuel Filter Warning Light illuminates, engine power (vehicle speed & idle speed) may decrease.***
- ***If you keep driving with the warning light on, engine parts (injector, common rail, high pressure fuel pump) may be damaged. If this occurs, have the vehicle inspected by a professional workshop as soon as possible. Kia recommends to visit an authorised Kia dealer/service partner.***

All Wheel Drive (AWD) Warning Light (if equipped)



This warning light illuminates:

- Once you set the ignition switch or Engine Start/Stop Button to the ON position.
  - It illuminates for approximately 3 seconds and then goes off.
- When there is a malfunction with the AWD system.

  In this case, have the vehicle inspected by a professional workshop as soon as possible.

  Kia recommends to visit an authorised Kia dealer/service partner.

Overspeed Warning Light (if equipped)



This warning light blinks:

- When you drive the vehicle more than 120 km/h.
  - This is to prevent you from driving your vehicle with overspeed.
  - The overspeed warning chime also sound for approximately 5 seconds.

LED Headlamp Warning Light (if equipped)



This warning light illuminates:

- Once you set the Engine Start/Stop Button to the ON position.
  - It illuminates for approximately 3 seconds and then goes off.
- When there is a malfunction with the LED headlamp.

In this case, have the vehicle inspected by a professional workshop. Kia recommends to visit an authorised Kia dealer/service partner.

This warning light blinks:

- When there is a malfunction with a LED headlamp related part.

In this case, have the vehicle inspected by a professional workshop. Kia recommends to visit an authorised Kia dealer/service partner.

⚠ CAUTION - LED Headlamp Warning Light

Continuous driving with the LED Headlamp Warning Light on or blinking can reduce LED headlamp (low beam) life.

Electronic Parking Brake (EPB) Warning Light (if equipped)

EPB

This warning light illuminates:

- Once you set the ignition switch or Engine Start/Stop Button to the ON position.
  - It illuminates for approximately 3 seconds and then goes off.
- When there is a malfunction with the EPB.

  In this case, have the vehicle inspected by a professional workshop as soon as possible.

  Kia recommends to visit an authorised Kia dealer/service partner.

✻ NOTICE - Electronic Parking Brake (EPB) Warning Light

The Electronic Parking Brake (EPB) Warning Light may illuminates when the Electronic Stability control (ESC) Indicator Light comes on to indicates that the ESC is not working properly (This does not indicate malfunction of the EPB).

Exhaust system (GPF) warning light (Gasoline Engine) (if equipped)



This warning light illuminates:

- When there is a malfunction with Gasoline Particulate Filter (GPF) system.
- When this warning light illuminates, it may turn off after driving the vehicle:
  - The vehicle should be driven for more than 30 minutes at a speed of 80k m/h (50 mph) and faster.
  - Ensure the following conditions are all met: safe road conditions, transmission 3rd gear or above, and engine speed of 1,500 - 4,000 rpm.

If this warning light blinks in spite of the procedure (at this time the LCD warning message will be displayed), have the GPF system checked by a professional workshop. Kia recommends to visit an authorized Kia dealer/service partner.

⚠ CAUTION - Gasoline Engine with GPF (if equipped)

If you continue to drive with the GPF warning light blinking for a long time, the GPF system can be damaged and fuel consumption can worsen.

Icy Road Warning Light (if equipped)



This warning light is to warn the driver he road may be icy.

When the temperature on the outside temperature gauge is approximately below 4°C (39°F) ~ 6°C (43°F), the Icy Road Warning Light and Outside Temperature Gauge 5 times blinks and then lluminates.

✻ NOTICE

If the icy road warning light appear whilst driving, you should drive more attentively and safely refraining from over-speeding, rapid acceleration, sud den braking or sharp turning, etc.

Master warning mode (if equipped)



- This warning light informs the driver the following situations

- LED head lamp malfunction (if equipped)
- Smart Cruise Control with Stop & Go malfunction (if equipped)
- Forward Collision-Avoidance Assist malfunction (if equipped)
- Blind-Spot Collision Warning radar blind (if equipped)
- Smart Cruise Control with Stop & Go radar blind (if equipped)
- Lamp malfunction
- High Beam Assist malfunction (if equipped)

The Master Warning Light illuminates if one or more of the above warning situations occur.

If the warning situation is solved, the master warning light will be turned off.

Icy Road Warning Light (if equipped)



This warning light is to warn the driver he road may be icy.

When the temperature on the outside temperature gauge is approximately below 4°C (39°F) ~ 6°C (43°F), the Icy Road Warning Light and Outside Temperature Gauge 5 times blinks and then lluminates.

✻ NOTICE

If the icy road warning light appear whilst driving, you should drive more attentively and safely refraining from over-speeding, rapid acceleration, sud den braking or sharp turning, etc.

Master warning mode (if equipped)



- This warning light informs the driver the following situations

- LED head lamp malfunction (if equipped)
- Lamp malfunction
- High Beam Assist malfunction (if equipped)

The Master Warning Light illuminates if one or more of the above warning situations occur.

If the warning situation is solved, the master warning light will be turned off.

Indicator Lights

Electronic Stability Control (ESC) Indicator Light (if equipped)



This indicator light illuminates:

- Once you set the ignition switch or Engine Start/Stop Button to the ON position.
  - It illuminates for approximately 3 seconds and then goes off.
- When there is a malfunction with the ESC system.

  In this case, have the vehicle inspected by a professional workshop as soon as possible.

  Kia recommends to visit an authorised Kia dealer/service partner.

This indicator light blinks:

Whilst the ESC is operating.

❈For more details, refer to “Electronic Stability Control (ESC)” in chapter 6.

Electronic Stability Control (ESC) OFF Indicator Light (if equipped)



This indicator light illuminates:

- Once you set the ignition switch or Engine Start/Stop Button to the ON position.
  - It illuminates for approximately 3 seconds and then goes off.
- When you deactivate the ESC system by pressing the ESC OFF button.

❈For more details, refer to “Electronic Stability Control (ESC)” in chapter 6.

Immobiliser Indicator Light (Without Smart Key) (if equipped)



This indicator light illuminates:

- When the vehicle detects the immobiliser in your key properly whilst the ignition switch is ON.
  - At this time, you can start the engine.
  - The indicator light goes off after starting the engine.

This indicator light blinks:

- When there is a malfunction with the immobiliser system.

  In this case, have the vehicle inspected by a professional workshop as soon as possible.

  Kia recommends to visit an authorised Kia dealer/service partner.

Immobiliser Indicator Light (With Smart Key) (if equipped)



This indicator light illuminates for up to 30 seconds:

- When the vehicle detects the smart key in the vehicle properly whilst the Engine Start/Stop Button is ACC or ON.
  - At this time, you can start the engine.
  - The indicator light goes off after starting the engine.

This indicator light blinks for a few seconds:

- When the smart key is not in the vehicle.
  - At this time, you can not start the engine.

This indicator light illuminates for 2 seconds and goes off:

- When the vehicle can not detect the smart key which is in the vehicle whilst the Engine Start/Stop Button is ON.

  In this case, have the vehicle inspected by a professional workshop as soon as possible.

  Kia recommends to visit an authorised Kia dealer/service partner.

This indicator light blinks:

- When the battery of the smart key is weak.
  - At this time, you can not start the engine. However, you can start the engine if you press the Engine Start/Stop Button with the smart key. (For more details, refer to “Starting the Engine” in chapter 6).
- When there is a malfunction with the immobiliser system.

  In this case, have the vehicle inspected by a professional workshop as soon as possible.

  Kia recommends to visit an authorised Kia dealer/service partner.

Turn Signal Indicator Light

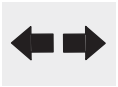

This indicator light blinks:

- When you turn the turn signal light on.

If any of the following occurs, there may a malfunction with the turn signal system. In this case, have the vehicle inspected by a professional workshop as soon as possible.

Kia recommends to visit an authorised Kia dealer/service partner.

- The indicator light does not blink but illuminates.
- The indicator light blinks more rapidly.
- The indicator light does not illuminate at all.

Low Beam Indicator Light (if equipped)



This indicator light illuminates:

- When the headlights are on.

High Beam Indicator Light



This indicator light illuminates:

- When the headlights are on and in the high beam position
- When the turn signal lever is pulled into the Flash-to-Pass position.

Light ON Indicator Light



This indicator light illuminates:

- When the tail lights or headlights are on.

Front Fog Indicator Light (if equipped)



This indicator light illuminates:

- When the front fog lights are on.

Rear Fog Indicator Light (if equipped)



This indicator light illuminates:

- When the rear fog lights are on.

High beam assist indicator



This warning light illuminates :

- When the high-Beam is on with the light switch in the AUTO light position.
- If your vehicle detects oncoming or preceding vehicles, the high beam assist system will switch the high beam to low beam automatically.

❊For more details, refer to “High beam assist” in chapter 4.

All Wheel Drive (AWD) LOCK Indicator Light (if equipped)



This indicator light illuminates:

- Once you set the ignition switch or Engine Start/Stop Button to the ON position.
  - It illuminates for approximately 3 seconds and then goes off.
- When you select AWD Lock mode by pressing the AWD LOCK button.
  - The AWD LOCK mode is to increase the drive power when driving on wet pavement, snow covered roads and/or off-road.

⚠ CAUTION - AWD Lock Mode

Do not use AWD LOCK mode on dry paved roads or highway, it can cause noise, vibration or damage of AWD related parts.

AUTO HOLD Indicator Light (if equipped)



This indicator light illuminates:

- [White] When you activate the auto hold system by pressing the AUTO HOLD button.
- [Green] When you stop the vehicle completely by depressing the brake pedal with the auto hold system activated.
- [Yellow] When there is a malfunction with the auto hold system.

  In this case, have the vehicle inspected by a professional workshop as soon as possible.

  Kia recommends to visit an authorised Kia dealer/service partner.

❊For more details, refer to “Auto Hold” in chapter 6.

Downhill Brake Control (DBC) Indicator Light (if equipped)



This warning light illuminates:

- Once you set the ignition switch or Engine Start/Stop Button to the ON position.
  - It illuminates for approximately 3 seconds and then goes off.
- When you activate the DBC system by pressing the DBC button.

This warning light blinks:

- When the DBC is operating.

This warning light illuminates yellow:

- When there is a malfunction with the DBC system.

  In this case, have the vehicle inspected by a professional workshop as soon as possible. Kia recommends to visit an authorised Kia dealer/service partner.

❈For more details, refer to “Downhill Brake Control (DBC) System” in chapter 6.

PARKING DISTANCE WARNING-REVERSE (PDW-R) (IF EQUIPPED)


OUM048575L

The parking distance warning-reverse assists the driver during backward movement of the vehicle by chiming if any object is sensed within a distance of 120 cm (47 in.) behind the vehicle.

This system is a supplemental system and it is not intended to nor does it replace the need for extreme care and attention of the driver. The sensing range and objects detectable by the back sensors are limited. Whenever backing-up, pay as much attention to what is behind you as you would in a vehicle without a parking distance warning-reverse.

⚠ WARNING

The parking distance warning-reverse is a supplementary function only. The operation of the parking distance warning-reverse can be affected by several factors (including environmental conditions). It is the responsibility of the driver to always check the area behind the vehicle before and whilst backing up.

Operation of the parking distance warning-reverse

Operating condition

- This system will activate when the indicator on the rear parking assist OFF button is not illuminated. If you desire to deactivate the parking distance warning-reverse, press the rear parking assist OFF button again. (The indicator on the button will illuminate.) To turn the system on, press the button again. (The indicator on the button will go off.)
- This system will activate when backing up with the ignition switch ON.

  If the vehicle is moving at a speed over 5 km/h (3 mph), the system may not be activated correctly.
- The sensing distance whilst the parking distance warning-reverse is in operation is approximately 120 cm (47 in.).
- When more than two objects are sensed at the same time, the closest one will be recognized first.

Types of warning sound	Indicator*
When an object is 120 cm to 61 cm (47 in. to 24 in.) from the rear bumper: Buzzer beeps intermittently.	
When an object is 60 cm to 31 cm (23 in. to 12 in.) from the rear bumper: Buzzer beeps more frequently.	
When an object is within 30 cm (11 in.) of the rear bumper: Buzzer sounds continuously.	

* if equipped

✻ NOTICE

The indicator may differ from the illustration as objects or sensors status.
If the indicator blinks, have the system checked by a professional workshop. Kia recommends to visit an authorised Kia dealer/service partner.

Non-operational conditions of parking distance warning-reverse

The parking distance warning-reverse may not operate properly when:

1. Moisture is frozen to the sensor. (It will operate normally when the moisture has been cleared.)
2. The sensor is covered with foreign matter, such as snow or water, or the sensor cover is blocked. (It will operate normally when the material is removed or the sensor is no longer blocked.)
3. Driving on uneven road surfaces (unpaved roads, gravel, bumps, gradient).
4. Objects generating excessive noise (vehicle horns, loud motorcycle engines, or truck air brakes) are within range of the sensor.
5. Heavy rain or water spray exists.
6. Wireless transmitters or mobile phones are within range of the sensor.
7. The sensor is covered with snow.
8. Trailer towing

The detecting range may decrease when:

1. The sensor is stained with foreign matter such as snow or water. (The sensing range will return to normal when removed.)
2. Outside air temperature is extremely hot or cold.

The following objects may not be recognized by the sensor:

1. Sharp or slim objects such as ropes, chains or small poles.
2. Objects which tend to absorb the sensor frequency such as clothes, spongy material or snow.
3. Undetectable objects smaller than 1 m (40 in.) in height and narrower than 14 cm (6 in.) in diameter.

Parking distance warning-reverse precautions

- The parking distance warning-reverse may not sound consistently depending on the speed and shapes of the objects detected.
- The parking distance warning-reverse may malfunction if the vehicle bumper height or sensor installation has been modified or damaged. Any non-factory installed equipment or accessories may also interfere with the sensor performance.
- The sensor may not recognize objects less than 30 cm (11 in.) from the sensor, or it may sense an incorrect distance. Use caution.
- When the sensor is frozen or stained with snow, dirt, or water, the sensor may be inoperative until the stains are removed using a soft cloth.
- Do not push, scratch or strike the sensor. Sensor damage could occur.

✻ NOTICE

This system can only sense objects within the range and location of the sensors; It can not detect objects in other areas where sensors are not installed. Also, small or slim objects, such as poles or objects located between sensors may not be detected by the sensors.
Always visually check behind the vehicle when backing up.
Be sure to inform any drivers of the vehicle that may be unfamiliar with the system regarding the systems capabilities and limitations.

⚠ WARNING

Pay close attention when the vehicle is driven close to objects on the road, particularly pedestrians, and especially children. Be aware that some objects may not be detected by the sensors, due to the object's distance, size or material, all of which can limit the effectiveness of the sensor. Always perform a visual inspection to make sure the vehicle is clear of all obstructions before moving the vehicle in any direction.

Self-diagnosis

If you don't hear an audible warning sound or if the buzzer sounds intermittently when shifting the gear to the R (Reverse) position, this may indicate a malfunction in the parking distance warning-reverse. If this occurs, have the system checked by a professional workshop. Kia recommends to visit an authorised Kia dealer/service partner.

⚠ WARNING

Your new vehicle warranty does not cover any accidents or damage to the vehicle or injuries to its occupants due to a parking distance warning-reverse malfunction. Always drive safely and cautiously.

PARKING DISTANCE WARNING (PDW) (IF EQUIPPED)

■ Front



OUM048047L

■ Rear



OUM048575L

The parking distance warning assists the driver during movement of the vehicle by chiming if any object is sensed within the distance of 100 cm (39 in.) in front and 120 cm (47 in.) behind the vehicle.

This system is a supplemental system and it is not intended to nor does it replace the need for extreme care and attention of the driver.

The sensing range and objects detectable by the sensors are limited. Whenever moving pay as much attention to what is in front and behind of you as you would in a vehicle without a parking distance warning.

⚠ WARNING

The parking distance warning should only be considered as a supplementary function. The driver must check the front and rear view. The operational function of the parking distance warning can be affected by many factors and conditions of the surroundings, so the responsibility rests always with the driver.

Operation of the parking assist system

Operating condition

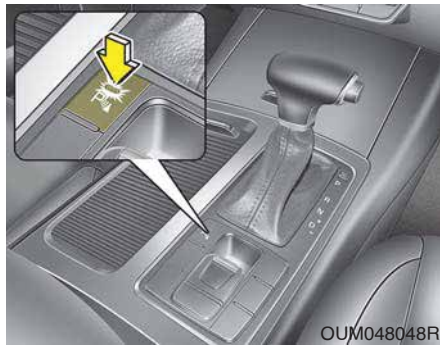

OUM048048R

- This system activates when the parking assist system button is pressed with the ignition switch ON.
- The indicator of the parking distance warning button turns on automatically and activates the parking distance warning when you shift the gear to the R (Reverse) position.

  It will turn off automatically when you drive above 40km/h (24.8 mph) (If parking assist equipped)

- The sensing distance whilst backing up is approximately 120 cm (47 in.) when you are driving less than 10 km/h (6.2 mph).
- The sensing distance whilst moving forward is approximately 100 cm (39 in.) when you are driving less than 10 km/h (6.2 mph).
- When more than two objects are sensed at the same time, the closest one will be recognized first.
- The side sensors are activated when you shift the gear to the R (Reverse) position.
- If the vehicle speed is above 20km/h, the system automatically turns off. To activate again, push the button.

✻ NOTICE

It may not operate if it's distance from the object is already less than approximately 25 cm when the system is ON.

Type of warning indicator and sound

: with Warning sound
: without Warning sound

Distance from object		Warning indicator		Warning sound
		When driving forward	When driving rearward	
100cm~61cm	Front		-	Buzzer beeps intermittently
120cm~61cm	Rear	-		Buzzer beeps intermittently
60cm~31cm	Front			Buzzer beeps frequently
	Rear	-		Buzzer beeps frequently
30cm	Front			Buzzer sounds continuously
	Rear	-		Buzzer sounds continuously

✻ NOTICE

- **The actual warning sound and indicator may differ from the illustration according to objects or sensor status.**
- **Do not wash the vehicle's sensor with high pressure water.**

⚠ CAUTION

- ***This system can only sense objects within the range and location of the sensors;***

  It can not detect objects in other areas where sensors are not installed. Also, small or slim objects, such as poles or objects located between sensors may not be detected by the sensors.

  Always visually check behind the vehicle when backing up.

- ***Be sure to inform any drivers of the vehicle that may be unfamiliar with the system regarding the systems capabilities and limitations.***

Non-operational conditions of parking distance warning

parking distance warning may not operate normally when:

1. Moisture is frozen to the sensor. (It will operate normally when moisture melts.)
2. Sensor is covered with foreign matter, such as snow or water, or the sensor cover is blocked. (It will operate normally when the material is removed or the sensor is no longer blocked.)
3. Sensor is stained with foreign matter such as snow or water. (Sensing range will return to normal when removed.)
4. The parking assist button is off.

There is a possibility of parking distance warning malfunction when:

1. Driving on uneven road surfaces such as unpaved roads, gravel, bumps, or gradient.
2. Objects generating excessive noise such as vehicle horns, loud motorcycle engines, or truck air brakes can interfere with the sensor.
3. Heavy rain or water spray.
4. Wireless transmitters or mobile phones present near the sensor.
5. Sensor is covered with snow.

Detecting range may decrease when:

1. Outside air temperature is extremely hot or cold.
2. Undetectable objects smaller than 1 m and narrower than 14 cm in diameter.

The following objects may not be recognized by the sensor:

1. Sharp or slim objects such as ropes, chains or small poles.
2. Objects, which tend to absorb sensor frequency such as clothes, spongy material or snow.

✻ NOTICE

1. **The warning may not sound sequentially depending on the speed and shapes of the objects detected.**
2. **The parking distance warning may malfunction if the vehicle bumper height or sensor installation has been modified. Any non-factory installed equipment or accessories may also interfere with the sensor performance.**
3. **Sensor may not recognize objects less than 30 cm from the sensor, or it may sense an incorrect distance. Use with caution.**
4. **When the sensor is frozen or stained with snow or water, the sensor may be inoperative until the stains are removed using a soft cloth.**
5. **Do not push, scratch or strike the sensor with any hard objects that could damage the surface of the sensor. Sensor damage could occur.**

✻ NOTICE

This system can only sense objects within the range and location of the sensors, it can not detect objects in other areas where sensors are not installed. Also, small or slim objects, or objects located between sensors may not be detected.
Always visually check in front and behind the vehicle when driving.
Be sure to inform any drivers in the vehicle that may be unfamiliar with the system regarding the systems capabilities and limitations.

⚠ WARNING

Pay close attention when the vehicle is driven close to objects on the road, particularly pedestrians, and especially children. Be aware that some objects may not be detected by the sensors, due to the objects distance, size or material, all of which can limit the effectiveness of the sensor. Always perform a visual inspection to make sure the vehicle is clear of all obstructions before moving the vehicle in any direction.

Self-diagnosis

When you shift the gear to the R (Reverse) position and if one or more of the below occurs you may have a malfunction in the rear parking distance warning.

- You don't hear an audible warning sound or if the buzzer sounds intermittently.
-  (blinks) is displayed. (if equipped)

If this occurs, have the system checked by a professional workshop. Kia recommends to visit an authorised Kia dealer/service partner.

⚠ WARNING

Your new vehicle warranty does not cover any accidents or damage to the vehicle or injuries to its occupants related to a parking distance warning. Always drive safely and cautiously.

REARVIEW CAMERA (IF EQUIPPED)


OUM048578L


OUM048050R

The rearview camera will activate when the back-up light is ON with the ignition switch ON and the shift lever in the R (Reverse) position.

This system is a supplemental system that shows behind the vehicle through the rearview display mirror whilst backing-up.

⚠ WARNING

- **This system is a supplementary function only. It is the responsibility of the driver to always check the inside/outside rearview mirror and the area behind the vehicle before and whilst backing up because there is a dead zone that can't be seen by the camera.**
- **Always keep the camera lens clean. If lens is covered with foreign matter, the camera may not operate normally.**

❈ If your vehicle is equipped with AVN(Audio, Video and Navigation) system, rearview display will show behind the vehicle through the AVN monitor whilst backing-up. Refer to a separately supplied manual for detailed information.

LIGHTING

Battery saver function

- The purpose of this feature is to prevent the battery from being discharged. The system automatically turns off the parking lights when the driver removes the ignition key and opens the driver-side door.
- With this feature, the parking lights will turn off automatically if the driver parks on the side of the road at night.

  If necessary, to keep the lights on when the ignition key is removed, perform the following:

  1) Open the driver-side door.
  2) Turn the parking lights OFF and ON again using the light switch on the steering column.

⚠ CAUTION

If the driver gets out of the vehicle through other doors (except driver's door), the battery saver function does not operate. Therefore, It causes the battery to be discharged. In this case, make sure to turn off the lamp before getting out of the vehicle.

Headlight escort function

If you turn the ignition switch to the ACC or OFF position with the headlights ON, the headlights remain on for about 5 minutes. However, if the driver's door is opened and closed, the headlights are turned off after 15 seconds.

The headlights can be turned off by pressing the lock button on the transmitter (or smart key) twice or turning the light switch to the OFF position.

Daytime running light (if equipped)

The Daytime Running Lights (DRL) can make it easier for others to see the front of your vehicle during the day. DRL can be helpful in many different driving conditions, and it is especially helpful after dawn and before sunset. The DRL system turns OFF when:

1. The headlight switch is ON.
2. The engine is OFF.
3. The front fog light is ON.
4. Engaging the Parking Brake

✻ NOTICE - Traffic change (for Europe)

The low beam light distribution is asymmetric. If you go abroad to a country with opposite traffic direction, this asymmetric part will dazzle oncoming car driver. To prevent dazzle, ECE regulation demand several technical solutions (ex. automatic change system, adhesive sheet, down aiming). This headlamps are designed to adjust in user setting mode in cluster.



The light switch has a Headlight and a Parking light position.

To operate the lights, turn the knob at the end of the control lever to one of the following positions:

(1) OFF position

(2) Auto light / DBL position

(3) Parking light position

(4) Headlight position



When the light switch is in the parking light position (3rd position), the tail, license and instrument panel lights will turn ON.



When the light switch is in the headlight position (4th position), the head, tail, license and instrument panel lights will turn ON.

✻ NOTICE

The ignition switch must be in the ON position to turn on the headlights.

Auto light/DBL position (if equipped)

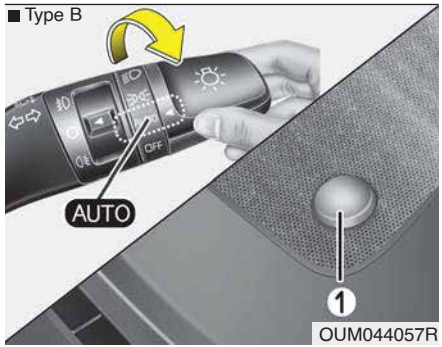

When the light switch is in the AUTO light position, the taillights and headlights will be turned ON or OFF automatically depending on the amount of light outside the vehicle.

If your vehicle is equipped with the adaptive front lighting system (DBL), it will also operate when the headlamp is ON.

⚠ CAUTION

- ***Never place anything over the sensor (1) located on the instrument panel. This will ensure better auto-light system control.***
- ***Don't clean the sensor using a window cleaner. The cleaner may leave a light film which could interfere with sensor operation.***
- ***If your vehicle has window tint or other types of metallic coating on the front windscreen, the Auto light system may not work properly.***

High beam operation

■ Type B

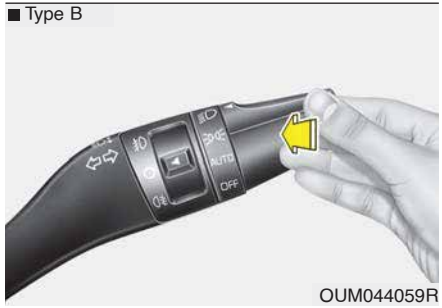

OUM044059R

To turn on the high beam headlamp, push the lever away from you. The lever will return to its original position.

The high beam indicator will light when the headlight high beams are switched on.

To prevent the battery from being discharged, do not leave the lights on for a prolonged time whilst the engine is not running.

⚠ WARNING

Do not use high beam when there are other vehicles. Using high beam could obstruct the other driver's vision.

■ Type B



OUM044058R

To flash the headlights, pull the lever towards you. It will return to the normal (low beam) position when released. The headlight switch does not need to be on to use this flashing feature.

Turn signals and lane change signals

■ Type B

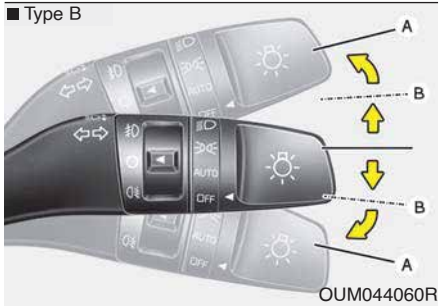

OUM044060R

The ignition switch must be on for the turn signals to function. To turn on the turn signals, move the lever up or down (A).

The green arrow indicators on the instrument panel indicate which turn signal is operating. They will self-cancel after a turn is completed. If the indicator continues to flash after a turn, manually return the lever to the OFF position.

To signal a lane change, move the turn signal lever slightly and hold it in position (B). The lever will return to the OFF position when released.

If an indicator stays on and does not flash or if it flashes abnormally, one of the turn signal bulbs may be burned out and will require replacement.

One-touch lane change function (if equipped)

To activate an one-touch lane change function, move the turn signal lever slightly for less than 0.7 second and then release it. The lane change signals will blink 3, 5 or 7 times.

You can active or deactive the One - touch lane change function or choose the number of blinking (3, 5 or 7) from the user settings mode (Light) on the LCD display.

For more information, refer to "user settings" in this chapter.

✻ NOTICE

If an indicator flash is abnormally quick or slow, a bulb may be burned out or have a poor electrical connection in the circuit.

Front fog light (if equipped)

■ Type B



OUM044061R

Fog lights are used to provide improved visibility when visibility is poor due to fog, rain or snow, etc. The fog lights will turn on when the fog light switch (1) is turned on after the parklight is turned on.

To turn off the fog lights, turn the fog light switch (1) to the ON position.

⚠ CAUTION

When in operation, the fog lights consume large amounts of vehicle electrical power. Only use the fog lights when visibility is poor.

Rear fog light (if equipped)

■ Type B



OUM044329R

To turn the rear fog lights on, turn the headlight switch to the headlight on position and turn the rear fog light switch (1) to the on position.

The rear fog lights turn on when the rear fog light switch is turned on after the front fog light switch is turned on and the headlight switch is in the parklight position.

To turn the rear fog lights off, turn the rear fog light switch to the on position again or turn the headlight switch off.

✻ NOTICE

To turn on the rear fog light switch, the ignition switch must be in the ON position.

Headlight levelling device (if equipped)

Manual type

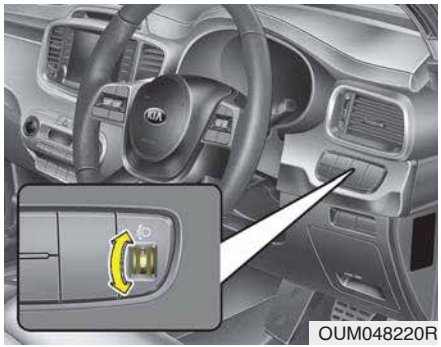

OUM048220R

To adjust the headlight beam level according to the number of passengers and loading weight in the luggage area, turn the beam levelling switch.

The higher the number of the switch position, the lower the headlight beam level. Always keep the headlight beam at the proper levelling position, or headlights may dazzle other road users.

Listed below are the examples of proper switch settings. For loading conditions other than those listed below, adjust the switch position so that the beam level may be the nearest as the condition obtained according to the list.

Loading condition	Switch position (7P)
Driver only	0
Driver + Front passenger	0
Driver + Front passenger+ 3rd row passenger	1
Full passengers	1
Full passengers (including driver) + Maximum permissible loading	2
Driver + Maximum permissible loading	3

Automatic type

It automatically adjusts the headlight beam level according to the number of passengers and loading weight in the luggage area.

And it offers proper headlight beam under various conditions.

⚠ WARNING

If it does not work properly even though your car is inclined backward according to passenger's posture, or the headlight beam is irradiated to the high or low position, have the system inspected by a professional workshop. Kia recommends to visit an authorised Kia dealer/service partner.

Do not attempt to inspect or replace the wiring yourself.

High Beam Assist (if equipped)

■ Type A

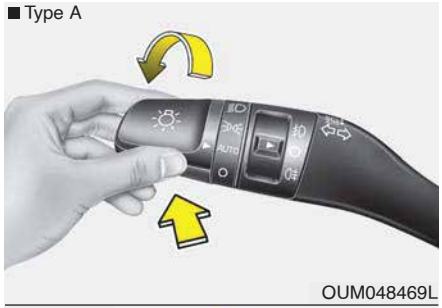

OUM048469L

■ Type B



OUM048469R

The High Beam Assist is a system that automatically adjusts the headlamp range (switches between high beam and low beam) according to the brightness of other vehicles and road conditions.

Operating condition

1. Place the light switch in the AUTO position.
2. Turn on the high beam by pushing the lever away from you.

   The High Beam Assist ( ) indicator will illuminate.
3. The High Beam Assist will turn on when vehicle speed is above 45kph (28mph).
   - If the lever is pushed away when the High Beam Assist is operating, the High Beam Assist will turn off and the high beam will be on continuously. The High Beam Assist ( ) indicator will turn off.
   - If the lever is pulled towards you when the high beam is on with operating High Beam Assist, the High Beam Assist will turn off.
4. If the light switch is placed to the headlamp position, the High Beam Assist will turn off and the low beam will be on continuously.

The high beam switches to low beam in the below conditions.

- When the High Beam Assist is off.
- When the light switch is not in the AUTO position.
- When the headlamp is detected from the on-coming vehicle.
- When the tail lamp is detected from the front vehicle.
- When the surrounding is bright enough high beams are not needed.
- When streetlights or other lights are detected.
- When vehicle speed is below 35km/h (22 mph).
- When headlamp / taillamp of bicycle/motorcycle is detected.

⚠ CAUTION

The system may not operate normally in the below conditions.

- ***When the light from the on-coming or front vehicle is not detected because of lamp damage, hidden from sight, etc.***
- ***When the lamp of the on-coming or front vehicle is covered with dust, snow or water.***
- ***When the light from the on-coming or front vehicle is not detected because of exhaust fume, smoke, fog, snow, etc.***
- ***When the front window is covered with foreign matters such as ice, dust, fog, or is damaged.***
- ***When there is a similar shape lamp with the front vehicle's lamps.***
- ***When it is hard to see because of fog, heavy rain or snow.***
- ***When the headlamp is not repaired or replaced at an authorised dealer.***

(Continued)

WIPERS AND WASHERS



OUM048514R/OUM048222L/OUM048221R/OUM044340L/OUM048223L/OUM048223R

A : Wiper speed control (front)

- MIST/ ⋁ – Single wipe
- OFF / O – Off
- INT / --- – Intermittent wipe
  AUTO* – Auto control wipe
- LO / 1 – Low wiper speed
- HI / 2 – High wiper speed

B : Intermittent control wipe time adjustment

C : Wash with brief wipes (front)*

D : Rear wiper/washer control*

- HI / 2 – Continuous wipe
- LO / 1 – Intermittent wipe*
- OFF / O – Off

E : Wash with brief wipes (rear)*

* if equipped

Windscreen wipers

Operates as follows when the ignition switch is turned ON.

MIST/ ⌵ : For a single wiping cycle, move the lever to this (MIST/ ⌵) position and release it. The wipers will operate continuously if the lever is held in this position.

OFF / O : Wiper is not in operation

INT / --- : Wiper operates intermittently at the same wiping intervals. Use this mode in light rain or mist. To vary the speed setting, turn the speed control knob.

LO / 1 : Normal wiper speed

HI / 2 : Fast wiper speed

✻ NOTICE

If there is heavy accumulation of snow or ice on the windscreen, defrost the windscreen for about 10 minutes, or until the snow and/or ice is removed before using the windscreen wipers to ensure proper operation. If you do not remove the snow and/or ice before using the wiper and washer, it may damage the Wiper and washer system.

Auto control (if equipped)

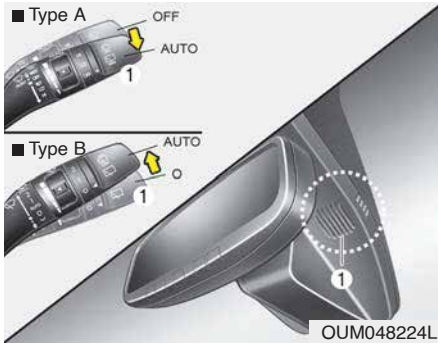

The rain sensor (1) located on the upper end of the windscreen glass senses the amount of rainfall and controls the wiping cycle for the proper interval. The more it rains, the faster the wiper operates. When the rain stops, the wiper stops.

To vary the speed setting, turn the speed control knob (1).

If the wiper switch is set in AUTO mode when the ignition switch is ON, the wiper will operate once to perform a self-check of the system. Set the wiper to OFF (O) position when the wiper is not in use.

⚠ CAUTION

When the ignition switch is ON and the windscreen wiper switch is placed in the AUTO mode, use caution in the following situations to avoid any injury to the hands or other parts of the body:

- ***Do not touch the upper end of the windscreen glass facing the rain sensor.***
- ***Do not wipe the upper end of the windscreen glass with a damp or wet cloth.***
- ***Do not put pressure on the windscreen glass.***

⚠ CAUTION

- ***When washing the vehicle, set the wiper switch in the OFF (O) position to stop the auto wiper operation.***

  The wiper may operate and be damaged if the switch is set in the AUTO mode whilst washing the vehicle.
- ***Do not remove the sensor cover located on the upper end of the driver side windscreen glass. Damage to system parts could occur and may not be covered by your vehicle warranty.***
- ***When starting the vehicle in winter, set the wiper switch in the OFF (O) position. Otherwise, wipers may operate and ice may damage the windscreen wiper blades. Always remove all snow and ice and defrost the windscreen properly prior to operating the windscreen wipers.***

(Continued)

(Continued)

- ***When tinting the windscreen, be careful of any fluid getting into the sensor located in the top centre of the front windscreen. It may damage the related parts.***

Windscreen washers

■ Type C



OUM048226R

In the OFF (O) position, pull the lever gently toward you to spray washer fluid on the windscreen and to run the wipers 1-3 cycles. Use this function when the windscreen is dirty.

The spray and wiper operation will continue until you release the lever.

If the washer does not work, check the washer fluid level. If the fluid level is not sufficient, you will need to add appropriate non-abrasive windscreen washer fluid to the washer reservoir.

The reservoir filler neck is located in the front of the engine compartment on the driver side.

⚠ CAUTION

To prevent possible damage to the washer pump, do not operate the washer when the fluid reservoir is empty.

⚠ WARNING

Do not use the washer in freezing temperatures without first warming the windscreen with the defrosters; the washer solution could freeze on the windscreen and obscure your vision.

⚠ CAUTION

- ***To prevent possible damage to the wipers or windscreen, do not operate the wipers when the windscreen is dry.***
- ***To prevent damage to the wiper blades, do not use petrol, kerosene, paint thinner, or other solvents on or near them.***
- ***To prevent damage to the wiper arms and other components, do not attempt to move the wipers manually.***
- ***To prevent possible damage to the wipers and washer system, use anti-freezing washer fluids in the winter season or cold weather.***

Headlight washer (if equipped)

If your vehicle is equipped with the headlight washer it will operate at the same time when you operate the windscreen washer. However, if this function is operated once, the headlight washer will not operate within 15 minutes. It will operate when the headlight is ON and the ignition switch or engine start/stop button is in the ON position.

The washer fluid will be sprayed on to the headlights.

✻ NOTICE

- **Check the headlight washers periodically to confirm that the washer fluid is being sprayed properly onto the headlight lenses.**
- **The headlight washer can be operated 15 minutes after being operated last time.**

Rear window wiper and washer switch



OUM048228R

The rear window wiper and washer switch is located at the end of the wiper and washer switch lever. Turn the switch to the desired position to operate the rear wiper and washer.

HI / 2 - Normal wiper operation

LO / 1 - Intermittent wiper operation (if equipped)

OFF / O - Wiper is not in operation

■ Type C



OUM048230R

Push the lever away from you to spray rear washer fluid and to run the rear wipers 1~3 cycles. The spray and wiper operation will continue until you release the lever.

INTERIOR LIGHT

⚠ CAUTION

Do not use the interior lights for extended periods when the engine is not running.

It may cause battery discharge.

⚠ WARNING

Do not use the interior lights when driving in the dark. Accidents could happen because the view may be obscured by interior lights.

Automatic turn off function (if equipped)

The interior lights automatically turn off approximately 20 minutes after the ignition switch is turned off.

If your vehicle is equipped with the theft alarm system, the interior lights automatically turns off approximately 5 seconds after the system is armed stage.

Map lamp

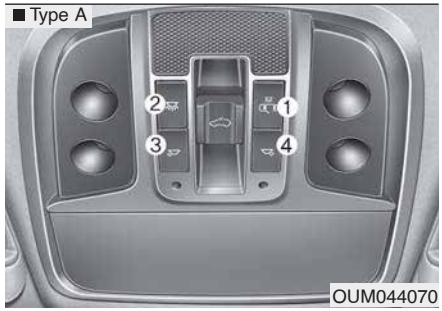

- Press the lens (A) to turn the map lamp.

  To turn the map lamp off, press the lens (A) again.

• (1) :

- The map lamp and room lamp comes on when a door is opened. The lamps go out after approximately 30 seconds.
- The map lamp and room lamp comes on for approximately 30 seconds when doors are unlocked with a transmitter or smart key as long as the doors are not opened.
- The map lamp and room lamp will stay on for approximately 20 minutes if a door is opened with the ignition switch in the ACC or LOCK/OFF position.
- The map lamp and room lamp will stay on continuously if the door is opened with the ignition switch in the ON position.
- The map lamp and room lamp will go out immediately if the ignition switch is changed to the ON position or all doors are locked.
- To turn off the DOOR mode, press the DOOR button (1) once again (not pressed).

✻ NOTICE

The DOOR mode and ROOM mode can not be selected at a time.

• (2):
The map lamp stays on at all times.

• (3):
The map lamp of passenger's side stays on at all times.

• (4):
The map lamp of driver's side stays on at all times.

Room lamp

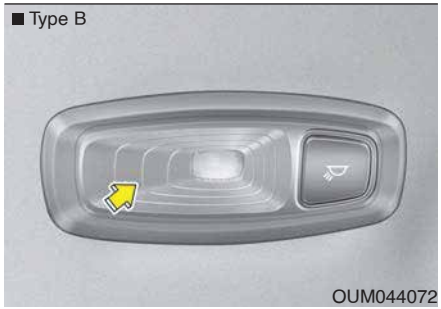

• : The light stays on at all times.

Luggage lamp



- : The light comes on when the tailgate is opened.
- : The light stays off at all times.
- : The light stays on at all times.

Glove box lamp

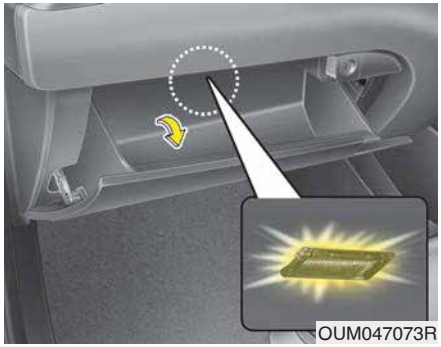

The glove box lamp comes on when the glove box is opened.

The parking lights must be ON for the glove box lamp to function.

Vanity mirror lamp (if equipped)



- : The lamp will turn on if this button is pressed.
- : The lamp will turn off if this button is pressed.

✻ NOTICE

Turn off the lamp before return the sunvisor to its original position.

WELCOME SYSTEM (IF EQUIPPED)

Headlight (Headlamp) escort function

The headlights (and/or taillights) remain on for approximately 5 minutes after the ignition key is removed or turned to the ACC or LOCK position. However, if the driver's door is opened and closed, the headlights are turned off after 15 seconds.

The headlights can be turned off by pressing the lock button on the transmitter or smart key twice or turning off the light switch from the headlight or Auto light position.

Interior light

When the interior light switch is in the DOOR position and all doors (and tailgate) are locked and closed, the room lamp will come on for 30 seconds if any of the below is performed.

- Without smart key system
  - When the door unlock button is pressed on the transmitter.
- With the smart key system
  - When the door unlock button is pressed on the smart key.
  - When the button of the outside door handle is pressed.

At this time, if you press the door lock button, the lamps will turn off immediately.

Pocket lamp (if equipped)

When all doors are locked and closed, the pocket lamp will come on for 15 seconds if any of the below is performed.

- With the smart key system
  - When the door unlock button is pressed on the smart key.
  - When the button of the outside door handle is pressed.

At this time, if you press the door lock button, the lamps will turn off immediately.

DEFROSTER

⚠ CAUTION

To prevent damage to the conductors bonded to the inside surface of the rear window, never use sharp instruments or window cleaners containing abrasives to clean the window.

✻ NOTICE

If you want to defrost and defog the front windscreen, refer to "Windscreen defrosting and defogging" in this section.

Rear window defroster

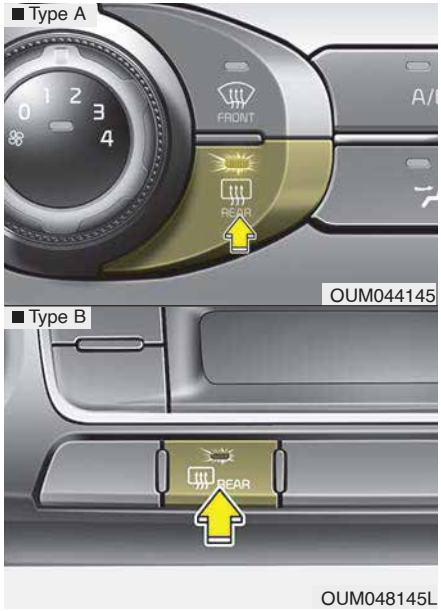

The defroster heats the window to remove frost, fog and thin ice from the rear window, whilst the engine is running.

To activate the rear window defroster, press the rear window defroster button located in the centre facia switch panel. The indicator on the rear window defroster button illuminates when the defroster is ON.

If there is heavy accumulation of snow on the rear window, brush it off before operating the rear defroster.

The rear window defroster automatically turns off after approximately 20 minutes or when the ignition switch is turned off. To turn off the defroster, press the rear window defroster button again.

Outside rearview mirror defroster (if equipped)

If your vehicle is equipped with the outside rearview mirror defrosters, they will operate at the same time you turn on the rear window defroster.

Wiper deicer (if equipped)

If your vehicle is equipped with the wiper deicer, it will operate at the same time you turn on the rear window defroster.

AUTOMATIC CLIMATE CONTROL SYSTEM (IF EQUIPPED)



■ **Front climate control (Type B)**



■ **3rd row air conditioning control**

1. Driver`s temperature control knob
2. Air conditioning button
3. Blower OFF button
4. Front windscreen defroster button
5. Rear window defroster button
6. Fan speed control button
7. Mode selection button
8. Air intake control button
9. Passenger`s temperature control knob
10. SYNC button
11. A/C display
12. 3rd row air conditioning ON/OFF button*
13. 3rd row air conditioning fan speed control knob*

* if equipped

⚠ CAUTION

Operating the blower when the ignition switch is in the ON position could cause the battery to discharge. Operate the blower when the engine is running.

❈ The actual shape may differ from the illustration.

OUM048146R/OUM048506R/OUM046445L

Automatic heating and air conditioning



OUM044337L

1. Press the AUTO button. The modes, fan speeds, air intake and air-conditioning will be controlled automatically according to the temperature setting.

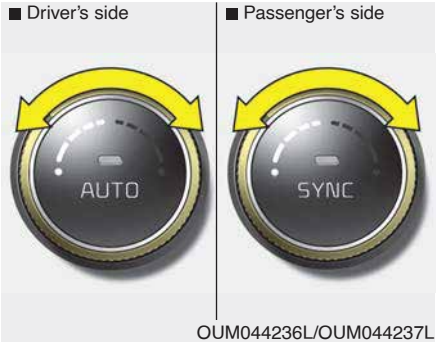

OUM044236L/OUM044237L

2. Turn the temperature control knob to the desired temperature.

✻ NOTICE

- **To turn the automatic operation off, select any button or switch of the following:**
  - **Mode selection button**
  - **Air conditioning button**
  - **Front windscreen defroster button (Press the button one more time to deselect the front windscreen defroster function. The 'AUTO' sign will illuminate on the information display once again.)**
  - **Air intake control button**
  - **Fan speed control button**

  The selected function will be controlled manually whilst other functions operate automatically.
- **For your convenience and to improve the effectiveness of the climate control, use the AUTO button and set the temperature to 22°C/71°F (23°C/73°F- Except Europe).**

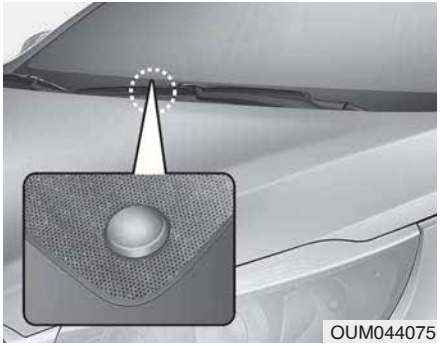
OUM044075

✻ NOTICE

Never place anything over the sensor located on the instrument panel to ensure better control of the heating and cooling system.

Manual heating and air conditioning

The heating and cooling system can be controlled manually by pressing buttons or turning knob(s) other than the AUTO button. In this case, the system works sequentially according to the order of buttons or knob(s) selected.

1. Start the engine.
2. Set the mode to the desired position.

   For improving the effectiveness of heating and cooling;

   - Heating:
   - Cooling:
3. Set the temperature control to the desired position.
4. Set the air intake control to the outside (fresh) air position.
5. Set the fan speed control to the desired speed.
6. If air conditioning is desired, turn the air conditioning system on.

Press the AUTO button in order to convert to full automatic control of the system.

Mode selection


OUM048160R

The mode selection button controls the direction of the air flow through the ventilation system.

The air flow outlet port is converted as follows:



Refer to the illustration in the “Manual climate control system”.

Face-Level

Air flow is directed toward the upper body and face. Additionally, each outlet can be controlled to direct the air discharged from the outlet.

Bi-Level

Air flow is directed towards the face and the floor.

Floor-Level

Most of the air flow is directed to the floor, with a small amount of the air being directed to the windscreen and side window defrosters.

Floor/Defrost-Level

Most of the air flow is directed to the floor and the windscreen with a small amount directed to the side window defrosters.



Defrost-Level

Most of the air flow is directed to the windscreen with a small amount of air directed to the side window defrosters.


OUM048151R

Instrument panel vents

The outlet vents can be opened or closed separately using the thumbwheel.

Also, you can adjust the direction of air delivery from these vents using the vent control lever as shown.

Temperature control

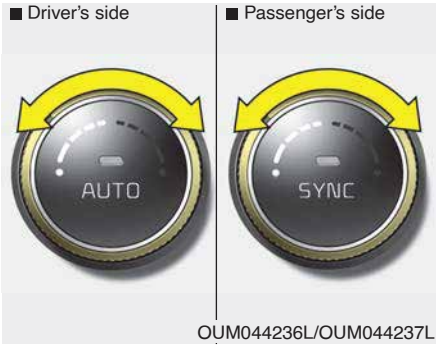

OUM044236L/OUM044237L

The temperature will increase to the maximum (HI) by turning the knob to the extreme right.

The temperature will decrease to the minimum (Lo) by turning the knob to the extreme left.

When turning the knob, the temperature will increase or decrease by 0.5°C/1°F. When set to the lowest temperature setting, the air conditioning will operate continuously.



OUM044338L

Adjusting the driver and passenger side temperature equally

- Press the "SYNC" button to adjust the driver and passenger side temperature equally.

  The passenger side temperature will be set to the same temperature as the driver side temperature.
- Turn the driver side temperature control knob. The driver and passenger side temperature will be adjusted equally.
- When the third row's air conditioning button is turned ON, the third row's climate and fan speed setting will automatically follow the first row settings.

Adjusting the driver and passenger side temperature individually

- Press the “SYNC” button again to adjust the driver and passenger side temperature individually. The illumination of button turns off.
- Operate the driver side temperature control knob to adjust the driver side temperature.
- Operate the passenger side temperature control knob to adjust the passenger side temperature.

Air intake control



This is used to select the outside (fresh) air position or recirculated air position.

To change the air intake control position, push the control button.

Recirculated air position



With the recirculated air position selected, air from the passenger compartment will be drawn through the heating system and heated or cooled according to the function selected.

Outside (fresh) air position





With the outside (fresh) air position selected, air enters the vehicle from outside and is heated or cooled according to the function selected.

✻ NOTICE

Prolonged operation of the heater in the recirculated air position (without air conditioning selected) may cause fogging of the windscreen and side windows and the air within the passenger compartment may become stale.
In addition, prolonged use of the air conditioning with the recirculated air position selected will result in excessively dry air in the passenger compartment.

Sunroof inside air recirculation (if equipped)

If the sunroof opens the outside (fresh) air will be selected automatically for ventilating the car. Then, if you select the recirculated air position, the outside (fresh) air will be selected automatically after 3 minutes.

If you close the sunroof, the intake mode will be changed to the previous selected mode.

⚠ WARNING

- **Continue using the climate control system in the recirculated air position may allow humidity to increase inside the vehicle which may fog the glass and obscure visibility.**
- **Do not sleep in a vehicle with the air conditioning or heating system on. It may cause serious harm or death due to a drop in the oxygen level and/or body temperature.**
- **Continue using the climate control system in the recirculated air position can cause drowsiness or sleepiness, and loss of vehicle control. Set the air intake control to the outside (fresh) air position as much as possible whilst driving.**

Fan speed control



OUM048166R

The fan speed can be set to the desired speed by pushing the fan speed control button.

The higher the fan speed is, the more air is delivered.

Pressing the OFF button turns off the fan.

Air conditioning



OUM048583L

Press the A/C button to turn the air conditioning system on (indicator light will illuminate).

Press the button again to turn the air conditioning system off.

OFF mode



OUM048169L

Press the front blower OFF button to turn off the front air climate control system. However, you can still operate the mode and air intake buttons as long as the ignition switch is in the ON position.

3rd row air conditioning (if equipped)

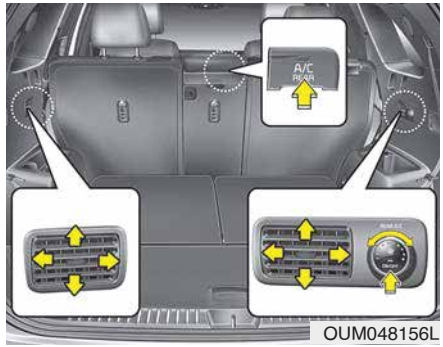

OUM048156L

To turn on the 3rd row air conditioning control system

1. You can operate the third row air conditioning system from the first row control panel. Changing the front row's fan speed by pressing the control button will automatically change the third row's fan speed as well.

   When the front row air conditioning has been turned off and you want to stop the A/C in the third row, press the third row air conditioning select button one more time. Then, the third row's A/C will also turn off.

2. The third row A/C system can be separately controlled by the control buttons in the third row. When the A/C is ON or OFF, the third row A/C control button in the front row will turn ON or OFF, informing the front passengers of the situation.
3. The fan speed of the third row air conditioning can also be separately controlled by turning the fan speed control knob.

Air conditioning (if equipped)

Kia Air Conditioning Systems are filled with environmentally friendly refrigerant*.

1. Start the engine. Push the air conditioning button.
2. Set the mode to the position.
3. Set the air intake control to the outside air or recirculated air position.
4. Adjust the fan speed control and temperature control to maintain maximum comfort.

*: Your vehicle is filled with R-134a or R-1234yf according to the regulation in your country at the time of producing. You can find out which air conditioning refrigerant is applied your vehicle at the label inside of engine room. Refer to section 9 for more detail location of air conditioning refrigerant label.

⚠ CAUTION

- ***The refrigerant system should only be serviced by trained and certified technicians to insure proper and safe operation.***
- ***The refrigerant system should be serviced in a well-ventilated place.***
- ***The air conditioning evaporator (cooling coil) shall never be repaired or replaced with one removed from a used or salvaged vehicle and new replacement MAC evaporators shall be certified (and labeled) as meeting SAE Standard J2842.***

✻ NOTICE

- **When using the air conditioning system, monitor the temperature gauge closely whilst driving up hills or in heavy traffic when outside temperatures are high. Air conditioning system operation may cause engine overheating. Continue to use the blower fan but turn the air conditioning system off if the temperature gauge indicates engine overheating.**
- **When opening the windows in humid weather air conditioning may create water droplets inside the vehicle. Since excessive water droplets may cause damage to electrical equipment, air conditioning should only be used with the windows closed.**

Air conditioning system operation tips

- If the vehicle has been parked in direct sunlight during hot weather, open the windows for a short time to let the hot air inside the vehicle escape.
- Use air conditioning to reduce humidity and moisture inside the vehicle on rainy or humid days.
- During air conditioning system operation, you may occasionally notice a slight change in engine speed as the air conditioning compressor cycles. This is a normal system operation characteristic.
- Use the air conditioning system every month only for a few minutes to ensure maximum system performance.
- When using the air conditioning system, you may notice clear water dripping (or even puddling) on the ground under the passenger side of the vehicle. This is a normal system operation characteristic.
- Operating the air conditioning system in the recirculated air position provides maximum cooling, however, continual operation in this mode may cause the air inside the vehicle to become stale.
- During cooling operation, you may occasionally notice a misty air flow because of rapid cooling and humid air intake. This is a normal system operation characteristic.

Climate control air filter

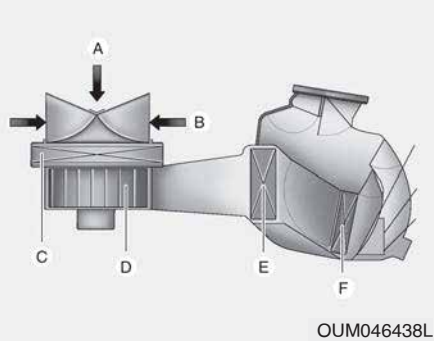

OUM046438L

A : Outside air
B : Recirculated air
C : Climate control air filter
D : Blower
E : Evaporator core
F : Heater core

The climate control air filter installed behind the glove box filters the dust or other pollutants that come into the vehicle from the outside through the heating and air conditioning system.

If dust or other pollutants accumulate in the filter over a period of time, the air flow from the air vents may decrease, resulting in moisture accumulation on the inside of the windscreen even when the outside (fresh) air position is selected. If this happens, have the climate control air filter replaced by a professional workshop. Kia recommends to visit an authorised Kia dealer/service partner.

✻ NOTICE

- **Replace the filter according to the Maintenance Schedule.**
  If the car is being driven in severe conditions such as dusty, rough roads, more frequent climate control air filter inspections and changes are required.
- **When the air flow rate suddenly decreases, have the system checked by a professional workshop. Kia recommends to visit an authorised Kia dealer/service partner.**

Air Conditioning refrigerant label

■ Example
Type A



OUM068047L

Type B

✻ The actual Air Conditioning refrigerant label in the vehicle may differ from the illustration.

Each symbols and specification on air conditioning refrigerant label means as below ;

1. Classification of refrigerant
2. Amount of refrigerant
3. Classification of Compressor lubricant

You can find out which air conditioning refrigerant is applied your vehicle at the label inside of the engine room.

Refer to section 9 for more detail location of air conditioning refrigerant label.

Checking the amount of air conditioner refrigerant and compressor lubricant

When the amount of refrigerant is low, the performance of the air conditioning is reduced. Overfilling also has a bad influence on the air conditioning system.

Therefore, if abnormal operation is found, have the system inspected by a professional workshop.

Kia recommends to visit an authorised Kia dealer/service partner.

⚠ WARNING - Vehicles equipped with R-134a*



Because the refrigerant is at very high pressure, the air conditioning system should only be serviced by trained and certified technicians. It is important that the correct type and amount of oil and refrigerant is used.

Otherwise, it may cause damage to the vehicle and personal injury.

⚠ WARNING - Vehicles equipped with R-1234yf*





Because the refrigerant is mildly inflammable and at very high pressure, the air conditioning system should only be serviced by trained and certified technicians. It is important that the correct type and amount of oil and refrigerant is used.

Otherwise, it may cause damage to the vehicle and personal injury.

*: Your vehicle is filled with R-134a or R-1234yf according to the regulation in your country at the time of producing. You can find out which air conditioning refrigerant is applied your vehicle at the label inside of engine room. Refer to section 9 for more detail location of air conditioning refrigerant label.

WINDSCREEN DEFROSTING AND DEFOGGING

⚠ WARNING - Windscreen heating

Do not use the or position during cooling operation in extremely humid weather. The difference between the temperature of the outside air and the windscreen could cause the outer surface of the windscreen to fog up, causing loss of visibility. In this case, set the mode selection to the position and fan speed control to the lower speed.

- For maximum defrosting, set the temperature control to the extreme right/hot position and the fan speed control to the highest speed.
- If warm air to the floor is desired whilst defrosting or defogging, set the mode to the floor-defrost position.
- Before driving, clear all snow and ice from the windscreen, rear window, outside rear view mirrors, and all side windows.
- Clear all snow and ice from the bonnet and air inlet in the cowl grill to improve heater and defroster efficiency and to reduce the probability of fogging up the inside of the windscreen.

Manual climate control system

To defog inside windscreen



1. Set the fan speed to the desired position.
2. Select desired temperature.
3. Select the or position.
4. The outside (fresh) air will be selected automatically. If the position is selected, air conditioning will also be selected automatically.

If the air conditioning and/or outside (fresh) air position are not selected automatically, press the corresponding button manually.

To defrost outside windscreen



1. Set the fan speed to the highest position.
2. Set the temperature to the extreme hot position.
3. Select the position.
4. The outside (fresh) air and air conditioning will be selected automatically.

Automatic climate control system

To defog inside windscreen

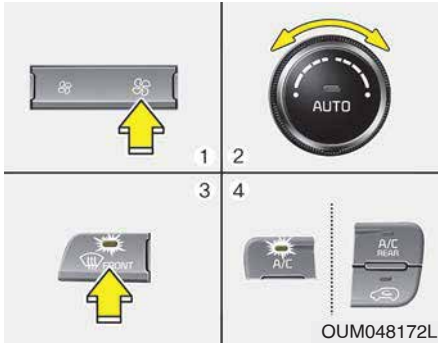

1. Set the fan speed to the desired position.
2. Select desired temperature.
3. Press the defroster button ( ).
4. The air conditioning will turn on according to the detected ambient temperature and outside (fresh) air position will be selected automatically.

If the air conditioning and outside (fresh) air position are not selected automatically, adjust the corresponding button manually. If the position is selected, lower fan speed is adjusted to a higher fan speed.

To defrost outside windscreen



1. Set the fan speed to the highest position.
2. Set the temperature to the extreme hot position.
3. Select the position.
4. The outside (fresh) air and air conditioning will be selected automatically.

Automatic climate control system

To defog inside windscreen

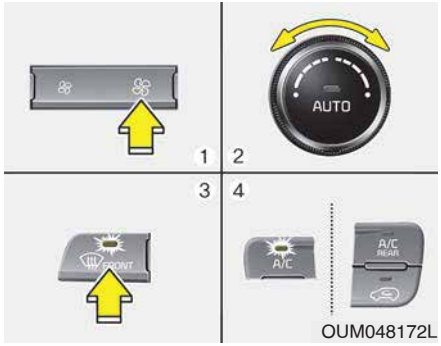

1. Set the fan speed to the desired position.
2. Select desired temperature.
3. Press the defroster button ( ).
4. The air conditioning will turn on according to the detected ambient temperature and outside (fresh) air position will be selected automatically.

If the air conditioning and outside (fresh) air position are not selected automatically, adjust the corresponding button manually. If the position is selected, lower fan speed is adjusted to a higher fan speed.

To defrost outside windscreen

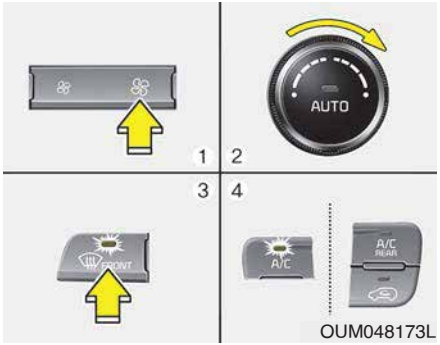

1. Set the fan speed to the highest position.
2. Set the temperature to the extreme hot (HI) position.
3. Press the defroster button ( ).
4. The air conditioning will turn on according to the detected ambient temperature and outside (fresh) air position will be selected automatically.

Auto defogging system (Only for automatic climate control system, if equipped)

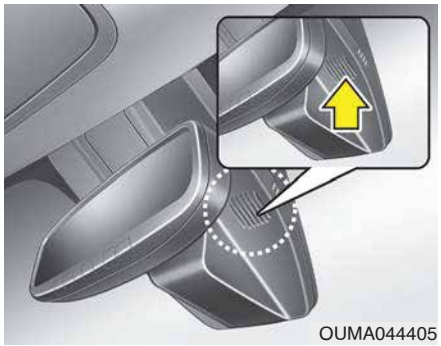

Auto defogging reduces the possibility of fogging up the inside of the windscreen by automatically sensing the moisture of inside the windscreen.

The auto defogging system operates when the AUTO mode is on.



This indicator illuminates when the auto defogging system senses the moisture of inside the windscreen and operates.

If more moisture is in the vehicle, higher steps operate as follow.

Step 1 : Operating the air conditioning
Step 2 : Outside air position
Step 3 : Blowing air flow toward the windscreen
Step 4 : Increasing air flow toward the windscreen

To cancel or reset the Auto Defogging System

Press the front windscreen defroster button for 3 seconds when the ignition switch is in the ON position.

When the ADS system is cancelled, Indicator on the button will blink 3 times per 0.5 sec and the position "ADS OFF" will be displayed on the climate control information screen.

When the ADS system is reset, Indicator on the button will blink 6 times per 0.25sec and the position "ADS OFF" will be disappeared on the climate control information screen.

STORAGE COMPARTMENT

These compartments can be used to store small items.

⚠ CAUTION

- ***To avoid possible theft, do not leave valuables in the storage compartment.***
- ***Always keep the storage compartment covers closed whilst driving. Do not attempt to place so many items in the storage compartment that the storage compartment cover cannot close securely.***

⚠ WARNING - Flammable materials

Do not store cigarette lighters, propane cylinders, or other flammable/explosive materials in the vehicle. These items may catch fire and/or explode if the vehicle is exposed to hot temperatures for extended periods.

Centre console storage

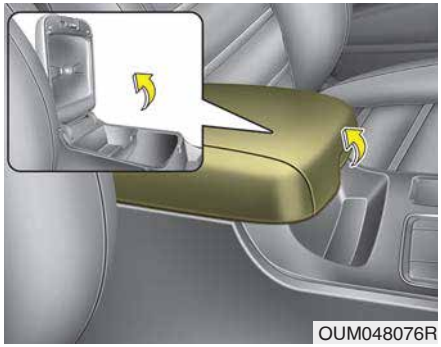
OUM048076R

To open the centre console storage, pull up the lever.

Glove box



OUM044077R

The glove box can be locked and unlocked with a master key. (if equipped)

To open the glove box,push the button (1) and the glove box will automatically open. Close the glove box after use.

⚠ WARNING

To reduce the risk of injury in an accident or sudden stop, always keep the glove box door closed whilst driving.

⚠ CAUTION

Do not keep food in the glove box for a long time.

Sunglass holder



To open the sunglass holder, press the cover and the holder will slowly open. Place your sunglasses with the lenses facing out. To close the sunglass holder, push it up.

⚠ WARNING

- **Do not keep objects except sunglasses inside the sunglass holder. Such objects can be thrown from the holder in the event of a sudden stop or an accident, possibly injuring the passengers in the vehicle.**
- **Do not open the sunglass holder whilst the vehicle is moving. The rear view mirror of the vehicle can be blocked by an opened sunglass holder.**
- **Do not put the glasses forcibly into a sunglass holder to prevent breakage or deformation of the glasses. It may cause personal injury if you try to open it forcibly when the glasses are jammed in the holder.**

Luggage box

■ Type A

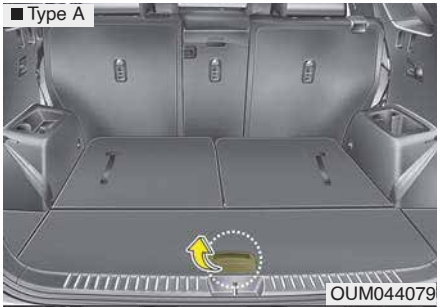

OUM044079

■ Type B (if equipped)

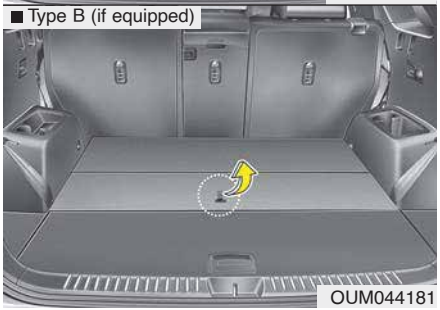

OUM044181

You can place a first aid kit, a reflector triangle, tools, etc. in the box for easy access.

Grasp the handle on the edge of the cover and lift it.

INTERIOR FEATURES

Cigarette lighter (if equipped)


OUM048332R

For the cigarette lighter to work, the ignition switch must be in the ACC position or the ON position.

To use the cigarette lighter, push it all the way into its socket. When the element has heated, the lighter will pop out to the “ready” position.

Kia recommends to use parts for replacement from an authorised Kia dealer/service partner.

⚠ WARNING

- **Do not hold the lighter in after it is already heated because it will overheat.**
- **If the lighter does not pop out within 30 seconds, remove it to prevent overheating.**
- **Do not insert foreign objects into the socket of the cigarette lighter. It may damage the cigarette lighter.**

⚠ CAUTION

The use of plug-in accessories (shavers, hand-held vacuums, and coffee pots, etc.) may damage the socket or cause electrical failure.

Ashtray (if equipped)

■ Type A


OUM048080R

■ Type B

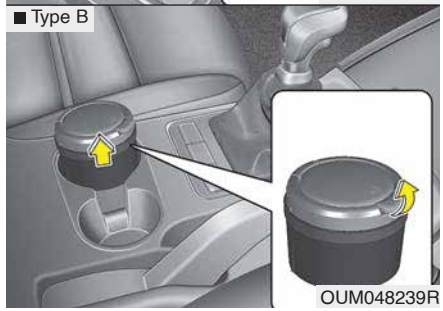
OUM048239R

To use the ashtray, open the cover.

To clean or empty the ashtray, pull it out.

⚠ WARNING - Ashtray use

- **Do not use the vehicle's ashtrays as waste receptacles.**
- **Putting lit cigarettes or matches in an ashtray with other combustible materials may cause a fire.**

Cup holder (if equipped)

⚠ WARNING - Hot liquids

- **Do not place uncovered cups of hot liquid in the cup holder whilst the vehicle is in motion. If the hot liquid spills, you may burn yourself. Such a burn to the driver could lead to loss of control of the vehicle.**
- **To reduce the risk of a personal injury in the event of a sudden stop or collision, do not place uncovered or unsecured bottles, glasses, cans, etc., in the cup holder whilst the vehicle is in motion.**
- **If uncovered cups and cans containing any form of liquid are put into the front/centre seat cup holders and the vehicle brakes heavily, the liquid may flow into the narrow openings around cup holders and console, and soak into the vehicle's internal electrical system. To avoid subsequent system malfunction, always firmly cover any container holding liquid.**

⚠ WARNING

Keep cans or bottles out of direct sun light and do not put them in a vehicle that is heated up. It may explode.

✻ NOTICE

- **Keep your drinks sealed whilst driving to prevent spilling your drink. If liquid spills, it may get into the vehicle's electrical/electronic system and damage electrical/electronic parts.**
- **When cleaning spilled liquids, do not dry the cup holder at high temperature. This may damage the cup holder.**

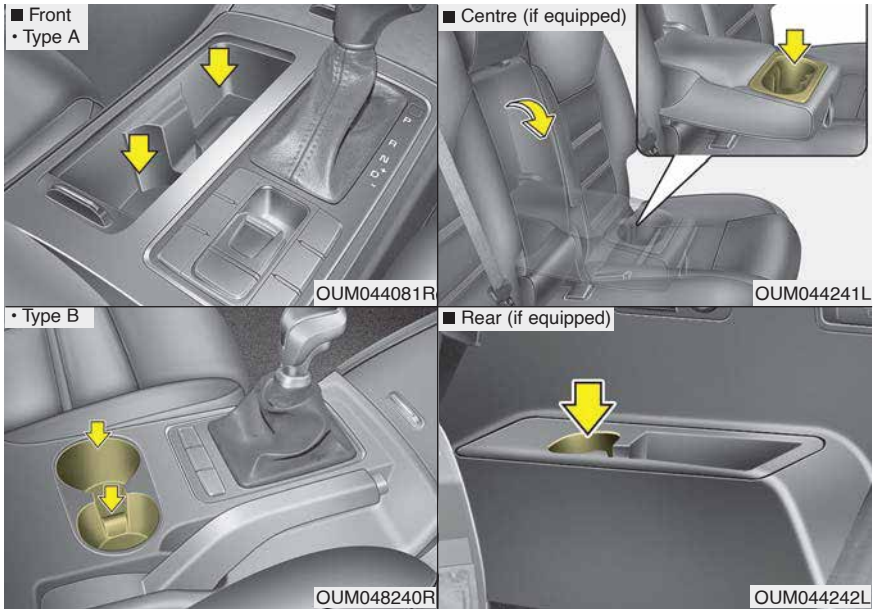

Cups or small beverage cans may be placed in the cup holders.

Bottle holder

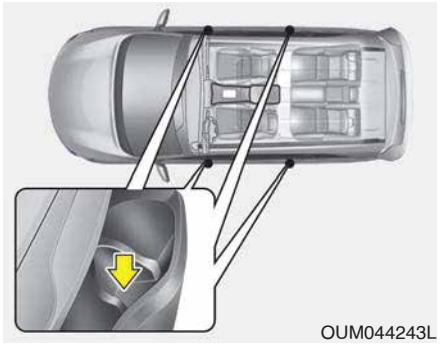

Bottles may be placed in the holder.

✻ NOTICE

Only bottles should be place in the holder as it is written in the vehicle "BOTTLE ONLY".

Sunvisor

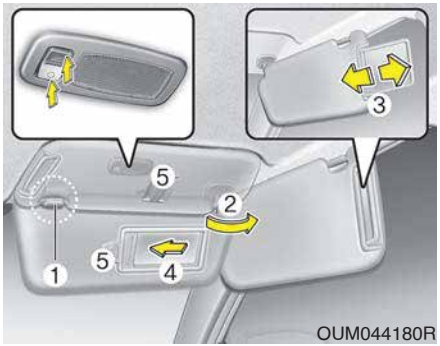

Use the sunvisor to shield direct light through the front or side windows.

To use the sunvisor, pull it downward.

To use the sunvisor for the side window, pull it downward, unsnap it from the bracket (1) and swing it to the side (2).

Adjust the sunvisor extension forward or backward (3).

To use the vanity mirror, pull down the visor and slide the mirror cover (4).

The ticket holder (5) is provided for holding a tollgate ticket. (if equipped)

⚠ CAUTION - Vanity mirror lamp (if equipped)

If you use the vanity mirror lamp, turn off the lamp before returning the sunvisor to its original position, otherwise it could result in battery discharge and possible sunvisor damage.

Power outlet





The power outlet is designed to provide power for mobile telephones or other devices designed to operate with vehicle electrical systems. The devices should draw less than 10 amps with the engine running.

⚠ CAUTION

- *Use the power outlet only when the engine is running and remove the accessory plug after use. Using the accessory plug for prolonged periods of time with the engine off could cause the battery to discharge.*
- *Only use 12V electric accessories which are less than 10A in electric capacity.*
- *Adjust the air-conditioner or heater to the lowest operating level when using the power outlet.*
- *Close the cover when not in use.*
- *Some electronic devices can cause electronic interference when plugged into a vehicle's power outlet. These devices may cause excessive audio static and malfunctions in other electronic systems or devices used in your vehicle.*

(Continued)

(Continued)

- *Refrain from using the heater or A/C if you need to use the multipurpose socket. If the heater or A/C has to be used simultaneously, have it to the lowest setting.*
- *Some add-on electrical equipment will induce electromagnetic interference. This will lead to subsequent malfunction or hinder good reception of the Audio/Video and electrical system.*
- *Always make sure that electric add-ons are fully plugged into the multipurpose sockets. Insecure contacts may lead to electrical malfunctions.*
- *Do not use any electrical device that requires more than the designated power consumption. The power outlet and electrical wiring may heat up resulting in electrical malfunctions.*

(Continued)

(Continued)

- *Always make sure that electric add -ons are fully plugged into the multipurpose sockets. Insecure contacts may lead to electrical malfunctions.*
- *Use plug in battery equipped electrical devices with reverse current protection. The current from the battery may flow into the vehicle's electronic system and cause system malfunction.*

⚠ WARNING

Do not put a finger or a foreign element (pin, etc.) into a power outlet and do not touch with a wet hand. You may get an electric shock.

USB charger (if equipped)



The USB charger is designed to recharge batteries of small size electrical devices using a USB cable. The electrical devices can be recharged when the Engine Start/Stop button is in ACC/ON/START position.

The battery charging state may be monitored on the electrical device.

Disconnect the USB cable from the USB port after use.

- Some devices are not supported for fast charging but will be charged with normal speed.
- Use the USB charger when the engine is running to prevent battery discharge.
- Only devices that fits the USB port can be used.
- The USB charger can be used only for battery charging purposes.
- Battery chargers cannot be charged.

Wireless smart phone charging system (if equipped)

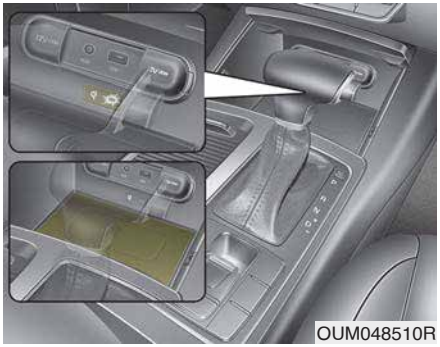

A wireless smart phone charging system located in front of the centre console.

Firmly close all doors, and turn the ignition to ACC or IGN ON. To start wireless charging, place the smart phone equipped with wireless charging function on the wireless charging pad.

For best wireless charging results, place the smart phone on the centre of the charging pad.

The wireless charging system is designed for one smart phone equipped with QI per single usage only. Please refer to the smart phone accessory cover or the smart phone manufacturer homepage to check whether your smart phone supports QI function.

⚠ WARNING

If any metallic object such as coins is located between the wireless charging system and the smart phone, the charging may be disrupted. Also, the metallic object may heat up.

Wireless smart phone charging

1. Remove any object on the smart phone charging pad including the smart key. If there is any foreign object on the pad other than a smart phone, the wireless charging function may not operate properly.
2. Place the smart phone on the centre of the wireless charging pad.
3. The indicator light will change to orange once the wireless charging begins. After the charging is complete, the orange light will change to green.
4. You can choose to turn the wireless charging function to either ON or OFF by selecting the USM on the instrument cluster. (Please refer to “Instrument Cluster” for details).

If the wireless charging does not work, gently move your smart phone around the pad until the charging indicator light turns yellow. Depending on the smart phone, the charging indicator light may not turn green even after the charging is complete.

If the wireless charging is not functioning properly, the orange light will blink and flash for ten seconds then turn off. In such cases, remove the smart phone from the pad and replace it on the pad again, or double check the charging status.

If you leave the smart phone on the charging pad when the vehicle ignition is in OFF, the vehicle will alert you through warning messages and sound (applicable for vehicles with voice guidance function) after the 'Good bye' function on the instrument cluster ends.

⚠ CAUTION

- ***Securely close the tray cover when using the wireless smart phone charge function. Otherwise, some liquid held by the cup holder may flow onto the wireless charging pad during sudden stops.***
- ***Close the tray cover when the smart phone is placed in it at all times. If the vehicle is in motion without the tray cover closed, it is more likely that the driver may use the smart phone. The use of smart phones whilst driving may lead to possible injuries and accidents.***
- ***If it is not possible to close the tray cover due to the size of the smart phone, do not use the wireless smart phone charging function at all.***

(Continued)

(Continued)

- ***When the tray cover is broken, do not use the wireless charging function before the tray cover is repaired.***
- ***When the interior temperature of the wireless charging system rises above a set temperature, the wireless charging will cease to function. After the interior temperature drops below the threshold, the wireless charging function will resume.***
- ***If there is any metallic object between the smart phone and the wireless charging pad, immediately remove the smart phone. Remove the metallic object after it has completely cooled down.***
- ***The wireless charging may not function properly when there is a heavy accessory cover on the smart phone.***

(Continued)

(Continued)

- *The wireless charging will stop when using the wireless smart key search function to prevent radio wave disruption.*
- *The wireless charging will stop when the smart key is moved out of the vehicle with the ignition in ON.*
- *The wireless charging will stop when any of the doors is opened (applicable for vehicles equipped with smart keys).*
- *The wireless charging will stop when the vehicle is turned OFF.*
- *The wireless charging will stop when the smart phone is not in complete contact with the wireless charging pad.*

(Continued)

(Continued)

- *Items equipped with magnetic components such as credit card, telephone card, bankbook, any transportation ticket and such may become damaged during wireless charging.*
- *Place the smart phone on the centre of the charge pad for best results. The smart phone may not charge when placed near the rim of the charging pad. When the smart phone does get charged, it may heat up excessively.*
- *For smart phones without built-in wireless charging system, an appropriate accessory has to be equipped.*
- *Smart phones of some manufacturers may display messages on weak current. This is due to the particular characteristic of the smart phone and does not imply a malfunction on wireless charging function.*

(Continued)

(Continued)

- *The indicator light of some manufacturers' smart phones may still be yellow after the smart phone is fully charged. This is due to the particular characteristic of the smart phone and not a malfunction of the wireless charging.*
- *When any smart phone without a wireless charging function or a metallic object is placed on the charging pad, a small noise may sound. This small sound is due to the vehicle discerning compatibility of the object placed on the charging pad. It does not affect your vehicle or the smart phone in any way.*

Clothes hanger (if equipped)

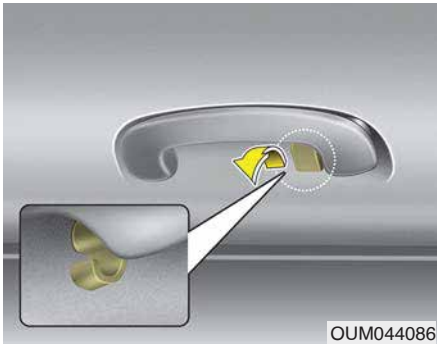

❊ This actual feature may differ from the illustration.

To use the hanger, pull down the upper portion of hanger.

⚠ CAUTION

Do not hang heavy clothes, since those may damage the hook.

⚠ WARNING

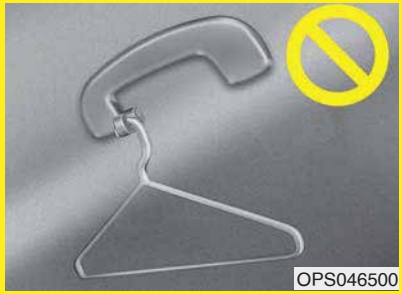

Do not hang other objects such as hangers or hard objects except clothes. Also, do not put heavy, sharp or breakable objects in the clothe pockets. In an accident or when the curtain air bag is inflated, it may cause vehicle damage or personal injury.

Floor mat anchor(s) (if equipped)

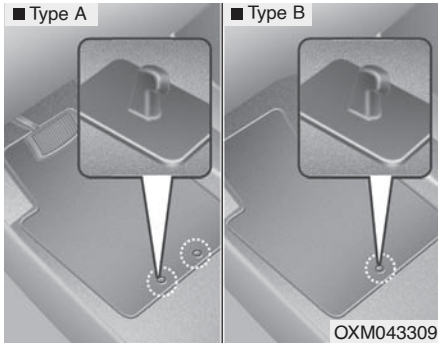

When using a floor mat on the front floor carpet, make sure it attaches to the floor mat anchor(s) in your vehicle. This keeps the floor mat from sliding forward.

⚠ WARNING

The following must be observed when installing ANY floor mat to the vehicle.

- **Ensure that the floor mats are securely attached to the vehicle's floor mat anchor(s) before driving the vehicle.**
- **Do not use ANY floor mat that cannot be firmly attached to the vehicle's floor mat anchors.**
- **Do not stack floor mats on top of one another (e.g. all-weather rubber mat on top of a carpeted floor mat). Only a single floor mat should be installed in each position.**

IMPORTANT - Your vehicle was manufactured with driver's side floor mat anchors that are designed to securely hold the floor mat in place. To avoid any interference with pedal operation, Kia recommends that the Kia floor mat designed for use in your vehicle be installed.

Side curtain (if equipped)



To use the side curtain:

1. Lift the curtain by the hook (1).
2. Hang the curtain on both sides of the hook.

Luggage net holder (if equipped)

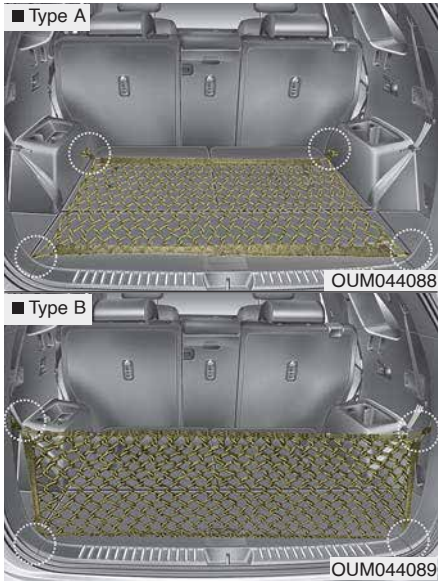

To keep items from shifting in the cargo area, you can use the holders located in the cargo area to attach the luggage net. If necessary, Kia recommends to contact an authorised Kia dealer/service partner.

⚠ CAUTION

To prevent damage to the goods or the vehicle, care should be taken when carrying fragile or bulky objects in the luggage compartment.

⚠ WARNING

To avoid eye injury, DO NOT overstretch the luggage net. ALWAYS keep your face and body out of the luggage net's recoil path. DO NOT use the luggage net when the strap has visible signs of wear or damage.

Cargo security screen (if equipped)

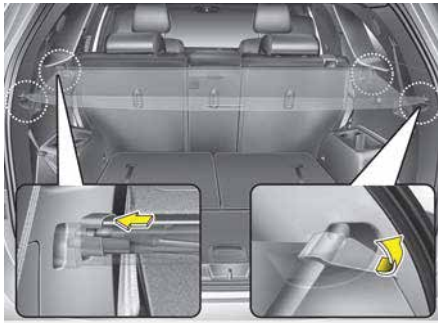

OUM044091

Use the cargo security screen to hide items stored in the cargo area.

To use the cargo security screen, pull the handle backward and insert the edges into the slots.



OUM044092



OUM044093



OUM044094

When not in use cargo security screen, follow below steps.

1. Pull up the luggage cover using the handle(1).
2. Pull up a triangle-shaped cover (2).
3. Place the cargo security screen on the lower portion of the cargo area.

⚠ WARNING

- **Do not place objects on the cargo security screen. Such objects may be thrown about inside the vehicle and possibly injure vehicle occupants during an accident or when braking.**
- **Never allow anyone to ride in the luggage compartment. It is designed for luggage only.**
- **Maintain the balance of the vehicle and locate the weight as far forward as possible.**

⚠ CAUTION

Since the cargo security screen may be damaged or malformed, do not put the luggage on it when it is used.

EXTERIOR FEATURES

Roof rack (if equipped)


OUM044095

If the vehicle has a roof rack, you can load cargo on top of your vehicle.

Crossbars and fixing components needed to install the roof rack on your vehicle may be obtained from an authorised Kia dealer/service partner or other qualified shop.

✻ NOTICE

- The crossbars (if equipped) should be placed in the proper load carrying positions prior to placing items onto the roof rack.
- If the vehicle is equipped with a sunroof, be sure not to position cargo onto the roof rack in such a way that it could interfere with sunroof operation.
- When the roof rack is not being used to carry cargo, the crossbars may need to be repositioned if wind noise is detected.

⚠ CAUTION

- *When carrying cargo on the roof rack, take the necessary precautions to make sure the cargo does not damage the roof of the vehicle.*
- *When carrying large objects on the roof rack, make sure they do not exceed the overall roof length or width.*
- *When you are carrying cargo on the roof rack, do not operate the sunroof (if equipped).*

⚠ WARNING

- **The following specification is the maximum weight that can be loaded onto the roof rack. Distribute the load as evenly as possible across the crossbars (if equipped) and roof rack and secure the load firmly.**

ROOF RACK	100 kg (220 lbs.) EVENLY DISTRIBUTED

Loading cargo or luggage in excess of the specified weight limit on the roof rack may damage your vehicle.

- **The vehicle centre of gravity will be higher when items are loaded onto the roof rack. Avoid sudden starts, braking, sharp turns, abrupt manoeuvre or high speeds that may result in loss of vehicle control or rollover resulting in an accident.**

(Continued)

(Continued)

- **Always drive slowly and turn corners carefully when carrying items on the roof rack. Severe wind updrafts, caused by passing vehicles or natural causes, can cause sudden upward pressure on items loaded on the roof rack. This is especially true when carrying large, flat items such as wood panels or mattresses. This could cause the items to fall off the roof rack and cause damage to your vehicle or others around you.**
- **To prevent damage or loss of cargo whilst driving, check frequently before or whilst driving to make sure the items on the roof rack are securely fastened.**

Audio system

Audio System 5-2
- **Antenna 5-2**
- **AUX, USB and iPod® port 5-3**
- **How vehicle audio works 5-3**

Audio 5-7
- **Feature of Your Audio. 5-11**
- **Radio. 5-16**
- **Media 5-18**
- **Phone 5-31**
- **Setup 5-38**

AUDIO SYSTEM

✻ NOTICE

If you install an after market HID head lamp, your vehicle's audio and electronic device may malfunction.

✻ If your vehicle is equipped with AVN(Audio, Video and Navigation) system, refer to a separately supplied manual for detailed information.

Antenna



Pole type antenna

Your vehicle uses a roof antenna to receive both AM and FM broadcast signals. This antenna pole is removable. To remove the antenna pole, turn it counterclockwise. To install the antenna, turn it clockwise.

⚠ CAUTION - Pole type antenna

- ***Before entering a place with a low height clearance or a car wash, remove the antenna pole by rotating it counter-clockwise. If not, the antenna may be damaged.***
- ***When reinstalling your antenna pole, it is important that it is fully tightened and adjusted to the upright position to ensure proper reception. But it could be removed when parking the vehicle or when loading cargo on the roof rack.***
- ***When cargo is loaded on the roof rack, do not place the cargo near the antenna pole to ensure proper reception.***

AUX, USB and iPod® port



You can use an AUX port to connect audio devices and an USB port to plug in an USB and also an iPod® port to plug in an iPod®.

✻ NOTICE

When using a portable audio device connected to the power outlet, noise may occur during playback. If this happens, use the power source of the portable audio device.

* iPod® is a trademark of Apple Inc.

How vehicle audio works

FM reception

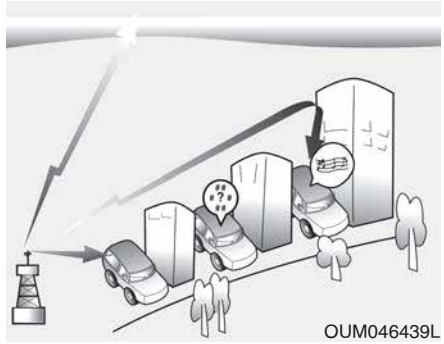

AM and FM radio signals are broadcast from transmitter towers located around your city. They are intercepted by the radio antenna on your vehicle. This signal is then received by the radio and sent to your vehicle speakers.

When a strong radio signal has reached your vehicle, the precise engineering of your audio system ensures the best possible quality reproduction. However, in some cases the signal coming to your vehicle may not be strong and clear.

This can be due to factors, such as the distance from the radio station, closeness of other strong radio stations or the presence of buildings, bridges or other large obstructions in the area.

AM (MW, LW) reception

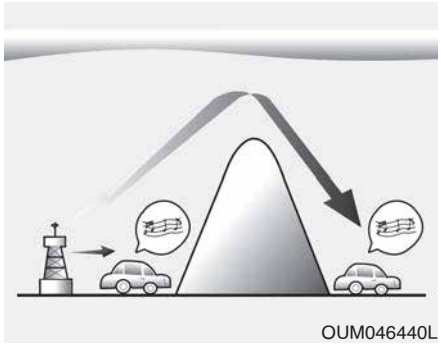
OUM046440L

AM broadcasts can be received at greater distances than FM broadcasts. This is because AM radio waves are transmitted at low frequencies. These long, low frequency radio waves can follow the curvature of the earth rather than travelling straight out into the atmosphere. In addition, they curve around obstructions so that they can provide better signal coverage.

FM radio station

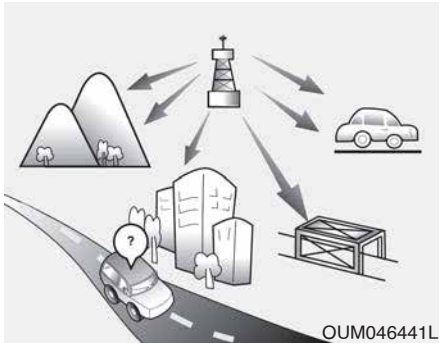
OUM046441L

FM broadcasts are transmitted at high frequencies and do not bend to follow the earth's surface. Because of this, FM broadcasts generally begin to fade at short distances from the station. Also, FM signals are easily affected by buildings, mountains, or other obstructions. These can result in certain listening conditions which might lead you to believe a problem exists with your radio. The following conditions are normal and do not indicate radio trouble:

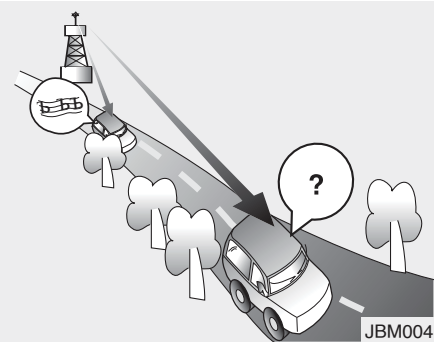

- Fading - As your vehicle moves away from the radio station, the signal will weaken and sound will begin to fade. When this occurs, we suggest that you select another stronger station.
- Flutter/Static - Weak FM signals or large obstructions between the transmitter and your radio can disturb the signal causing static or fluttering noises to occur. Reducing the treble level may lessen this effect until the disturbance clears.

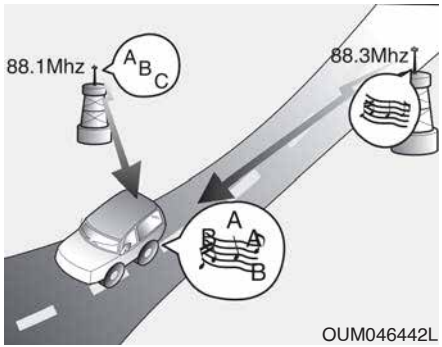

- Station Swapping - As a FM signal weakens, another more powerful signal near the same frequency may begin to play. This is because your radio is designed to lock onto the clearest signal. If this occurs, select another station with a stronger signal.
- Multi-Path Cancellation - Radio signals being received from several directions can cause distortion or fluttering. This can be caused by a direct and reflected signal from the same station, or by signals from two stations with close frequencies. If this occurs, select another station until the condition has passed.

Using a mobile phone or a two-way radio

When a mobile phone is used inside the vehicle, noise may be produced from the audio system. This does not mean that something is wrong with the audio equipment. In such a case, use the mobile phone at a place as far as possible from the audio equipment.

⚠ CAUTION

When using a communication system such as a mobile phone or a radio set inside the vehicle, a separate external antenna must be fitted. When a mobile phone or a radio set is used with an internal antenna alone, it may interfere with the vehicle's electrical system and adversely affect safe operation of the vehicle.

⚠ WARNING

Do not use a mobile phone whilst driving. Stop at a safe location to use a mobile phone.

iPod®

iPod® is a registered trademark of Apple Inc.

Bluetooth® Wireless Technology

The Bluetooth® word mark and logos are registered trademarks owned by Bluetooth SIG, Inc. and any use of such marks by Kia is under license. Other trademarks and trade names are those of their respective owners.

A *Bluetooth®* Wireless Technology enabled cell phone is required to use *Bluetooth®* Wireless Technology.



AUDIO



❊ The actual may differ from the illustration.

C5G4H0000EE/C5G4H0001EE

Feature of Your Audio

Head unit



❈ The actual features in the vehicle may differ from the illustration.

(1) **EJECT**
- Eject the inserted disc.

(2) **SEEK/TRACK**
- Search for frequencies in radio mode.
- Change the current song in media mode.

(3) **RADIO**
- Start FM and AM Radio.

(4) **MEDIA**
- Select Disc, USB(iPod®) or AUX.
- Display the media menu when two or more media are connected or when the **[MEDIA]** button is pressed in media mode.

(5) **MUTE**
- Mute audio output.

(6) **POWER/VOL** knob
- Turn to adjust the volume.
- Press to turn the device on or off.

■ Type B



(7) **DISP**

- Turn the display on or off.

(8) **PRESET**

- Move to the previous/next preset page in radio mode.

(9) **SETUP/CLOCK**

- Access Display, Sound, Date/Time, System and Display Off settings.

(10) **MENU**

- Display additional menus available on the current screen.

(11) **BACK**

- Return to the previous screen.

(12) **TUNE** knob

- Turn to navigate through the stations/songs list.
- Press to select an item.



(13) **[1] ~ [6]** (Preset)

- Save/play presets in radio mode.
- Select/launch the numeric menus displayed on the screen.



(With *Bluetooth*® Wireless Technology)

C5G4H0002EE/C5G4H0003EE

Feature of Your Audio

Head unit



❊ The actual features in the vehicle may differ from the illustration.

(1) **EJECT**
- Eject the inserted disc.

(2) **SEEK/TRACK**
- Search for next station in DAB/FM* and AM radio mode.
- Change the current song in media mode.

(3) **RADIO**
- Start DAB/FM* or AM Radio.

(4) **MEDIA**
- Select Disc, USB(iPod®), Bluetooth® (BT) Audio or AUX.
- Display the media menu when two or more media are connected or when the **[MEDIA]** button is pressed in media mode.

* if equipped

(5) **PHONE**
- Start Bluetooth® Phone mode.

(6) **POWER/VOL** knob
- Turn to adjust the volume.
- Press to turn the device on or off.

Steering wheel remote control

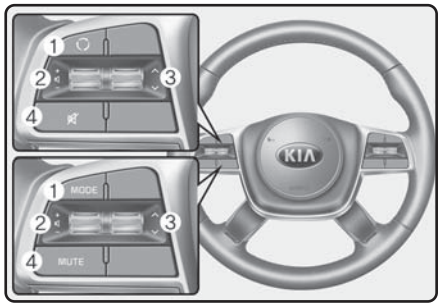

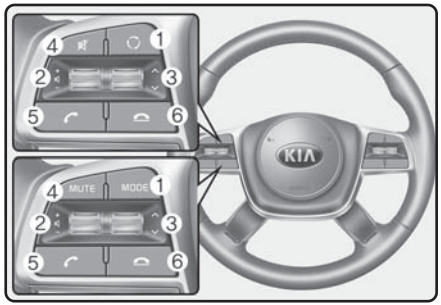

(Bluetooth® equipped model)

❊ The actual features in the vehicle may differ from the illustration.

(1) **MODE**

- Press the button to change the mode in the following order: Radio ➟ Media.
- Press and hold the button to turn off. (if equipped)

(2) **VOLUME**

- Press to adjust the volume.

(3) **UP/DOWN**

- Press the button in radio mode to search Presets.
- Press and hold the button in radio mode to search frequencies.
- Press the button in media mode to change the current song. (except AUX)
- Press and hold the button in media mode to quick search through songs. (except Bluetooth®(BT) Audio and AUX)

(4) **MUTE**

- Mutes the audio. (It will be paused in some media modes.)
- Mutes the microphone during a call. (Bluetooth® equipped model)

(5) **CALL** (if equipped)

- Pressing the button
  - If not in Bluetooth® Handsfree mode or receiving a phone call.

    First press: Automatically display the most recently Dialled Call number.

    Second press: Dial the phone number entered.
  - Press in the Incoming Call notification screen to accept the phone call.
  - Press in Bluetooth® Handsfree mode to switch to the waiting call.
- Pressing and holding the button (more than 1.0 seconds)
  - If not in Bluetooth® Handsfree mode or receiving a phone call, the most recently Dialled Call number is dialled.
  - Press in Bluetooth® Handsfree mode to transfer the call to your cell phone.
  - Press in cell phone mode to switch to Bluetooth® Handsfree mode.

(6) **END** (if equipped)

- Press in Bluetooth® Handsfree mode to end the phone call.
- Press in the incoming call screen to reject the call.

⚠ WARNING
- Audio System Safety Warnings

- **Do not stare at the screen whilst driving. Staring at the screen for prolonged periods of time could lead to traffic accidents.**
- **Do not disassemble, assemble, or modify the audio system. Such acts could result in accidents, fire, or electric shock.**
- **Using the phone whilst driving may lead to a lack of attention of traffic conditions and increase the likelihood of accidents. Use the phone feature after parking the vehicle.**
- **Exercise caution not to spill water or introduce foreign objects into the device. Such acts could lead to smoke, fire, or product malfunction.**

(Continued)

(Continued)

- **Please refrain from use if the screen is blank or no sound can be heard as these signs may indicate product malfunction. Continued use in such conditions could lead to accidents (fires, electric shock) or product malfunctions.**
- **Do not touch the antenna during thunder or lightening as such acts may lead to lightning induced electric shock.**
- **Do not stop or park in parking-restricted areas to operate the product. Such acts could lead to traffic accidents.**
- **Use the system with the vehicle engine turned on. Prolonged use with the ignition turned on only could result in battery discharge.**

⚠ WARNING
- Distracted Driving

Driving whilst distracted can result in a loss of vehicle control that may lead to an accident, severe personal injury, and death. The driver's primary responsibility is in the safe and legal operation of a vehicle, and use of any handheld devices, other equipment, or vehicle systems which take the driver's eyes, attention and focus away from the safe operation of a vehicle or which are not permissible by law should never be used during operation of the vehicle.

⚠ CAUTION

- ***Operating the device whilst driving could lead to accidents due to a lack of attention to external surroundings. First park the vehicle before operating the device.***
- ***Adjust the volume to levels that allow the driver to hear sounds from outside of the vehicle. Driving in a state where external sounds cannot be heard may lead to accidents.***
- ***Pay attention to the volume setting when turning the device on. A sudden output of extreme volume upon turning the device on could lead to hearing impairment. (Adjust the volume to a suitable levels before turning off the device.)***

(Continued)

(Continued)

- ***Turn on the car engine before using this device. Do not operate the audio system for long periods of time only with the ignition turned on as such operations may lead to battery discharge.***
- ***Do not subject the device to severe shock or impact. Direct pressure onto the front side of the monitor may cause damage to the LCD.***
- ***When cleaning the device, make sure to turn off the device and use a dry and smooth cloth. Never use tough materials, chemical cloths, or solvents (alcohol, benzene, thinners, etc.) as such materials may damage the device panel or cause colour/quality deterioration.***

(Continued)

(Continued)

- ***Do not place beverages close to the audio system. Spilling beverages may lead to system malfunction.***
- ***In case of product malfunction, please contact your place of purchase or After Service centre.***
- ***Placing the audio system within an electromagnetic environment may result in noise interference.***
- ***Prevent caustic solutions such as perfume and cosmetic oil from contacting the dashboard because they may cause damage or discoloration.***

Information on status icons

Icons showing audio status are shown in the upper-right corner of the screen.

Icon		Description
	Mute	Mute engaged
	Battery	Remaining battery life of a connected Bluetooth® device
	Handsfree + Audio streaming connection	Bluetooth® Handsfree call and audio streaming available
	Handsfree connection	Bluetooth® Handsfree call available
	Bluetooth® audio streaming	Bluetooth® audio streaming available
	Downloading contacts	Downloading contacts through Bluetooth® wireless communications
	Downloading call history	Downloading call history through Bluetooth® wireless communications

Icon		Description
	Line busy	Phone call in progress
	Mute mic	Mic muted during a call (caller cannot hear your voice)
	Phone signal strength	Display the phone signal strength for a cell phone connected by Bluetooth®

Radio

FM/AM (with RDS)



Switching between FM and AM

Press the **[RADIO]** button on the audio system to switch between FM and AM.

Searching stations

Press the **[SEEK/TRACK]** button to search stations.

Presets

Save up to 36 frequently used stations.

1. Press and hold the desired slot from 1 through 36. This saves the current station in the selected slot. If the slot is empty, simply pressing saves the station to the slot.
2. To save in slots numbered 7 or higher, press the **[PRESET]** button to move to the previous/next page and save.

To listen to a preset station, press the desired station in the list.

Menu

Press the **[MENU]** button, and select the desired function.

- List: A list of all stations available in the current location of the vehicle is displayed. Press the desired station.
- Traffic Announcement (TA): Enable or disable Traffic Announcements.
- Scan: All available stations are played for five seconds each.
- Sound Settings: Audio sound settings can be changed.

FM/AM (without RDS)



Switching between FM and AM

Press the **[RADIO]** button on the audio system to switch between FM and AM.

Searching stations

Press the **[SEEK/TRACK]** button to search stations.

Presets

Save up to 36 frequently used stations.

1. Press and hold the desired slot from 1 through 36. This saves the current station in the selected slot. If the slot is empty, simply pressing saves the station to the slot.
2. To save in slots numbered 7 or higher, press the **[PRESET]** button to move to the previous/next page and save.

To listen to a preset station, press the desired station in the list.

Menu

Press the **[MENU]** button, and select the desired function.

- List: A list of all stations available in the current location of the vehicle is displayed. Press the desired station. Select [Refresh] to update the list of available stations.
- Scan: All stations available in the current location of the vehicle are played for five seconds each.
- Sound Settings: Audio sound settings can be changed.

DAB/FM (with DAB)



Switching between DAB/FM and AM

Press the **[RADIO]** button on the audio system to switch between DAB/FM and AM.

Searching stations

Press the **[SEEK/TRACK]** button to search stations.

Presets

Save up to 36 frequently used stations.

1. Press and hold the desired slot from 1 through 36. This saves the current station in the selected slot. If the slot is empty, simply pressing saves the station to the slot.
2. To save in slots numbered 7 or higher, press the **[PRESET]** button to move to the previous/next page and save.

To listen to a preset station, press the desired station in the list.

Menu

Press the **[MENU]** button, and select the desired function.

- List: A list of all available stations in the current location of the vehicle is displayed. Press the desired station.
- Traffic Announcement (TA): Enable or disable Traffic Announcements.
- Region : Enable or disable automatic switching between regional stations.
- Sound Settings: Audio sound settings can be changed.
- Scan: All available stations are played for five seconds each.
- Manual tune FM : Search for frequencies manually.

Media

✻ NOTICE - Using the Discs

- **This device has been manufactured to be compatible with software bearing the following logo marks.**
- **Do not clean discs with chemical solutions, such as record sprays, antistatic sprays, antistatic liquids, benzene, or thinners.**
- **After using a disc, put the disc back in its original case to prevent disc scratches.**
- **Hold discs by their edges or within the centre hole to prevent damages to disc surfaces.**
- **Do not introduce foreign substances into the disc insert/eject slot. Introducing foreign substances could damage the device interior.**
- **Do not insert two discs simultaneously.**

(Continued)

(Continued)

- **When using CD-R/CD-RW discs, differences in disc reading and playing times may occur depending on the disc manufacturer, production method and the recording method as used by the user.**
- **Clean fingerprints and dust off the disc surface (coated side) with a soft cloth.**
- **The use of CD-R/CD-RW discs attached with labels may result in disc slot jams or difficulties in disc removal. Such discs may also result in noise whilst playing.**
- **Some CD-R/CD-RW discs may not properly operate depending on the disc manufacturer, production method and the record method as used by the user. If problems persist, trying using a different CD as continued use may result in malfunctions.**
- **The performance of this product may differ depending on the CD-RW Drive Software.**

(Continued)

(Continued)

- **Copy-protected CDs such as Stype CDs may not function in the device. DATA discs cannot be played. (However, such discs may still operate but will do so abnormally.)**
- **Do not use abnormally shaped discs (8cm, heart-shaped, octagon-shaped) as such discs could lead to malfunctions.**
- **If the disc is straddled on the disc slot without removal for 10 seconds, the disc will automatically be re-inserted into the disc player.**
- **Only genuine audio CDs are supported. Other discs may result in recognition failure (e.g. copy CDR, CDs with labels).**

Disc CD

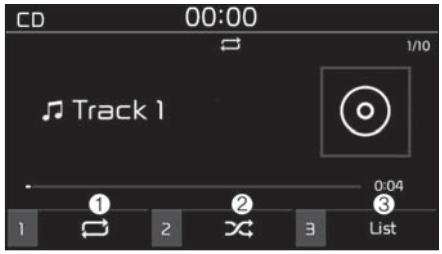

(1) Repeat

Enable/disable repeat by pressing button **[1]**.

(2) Shuffle

Enable/disable shuffle play by pressing button **[2]**.

(3) List

View a list of all songs by pressing button **[3]**.

Playback

Press the **[MEDIA]** button, and select [Disc CD].

- When a disc is inserted in the audio system, disc playback begins automatically.

Changing songs

Press the **[SEEK/TRACK]** button to play the previous or next song.

Press and hold the **[SEEK/TRACK]** button to rewind or fast-forward the currently playing song.

Search songs by turning **TUNE** knob, and press the knob to play.

Selecting songs from a list

Select [List] to see a list of songs available for play.

Select and play the desired song.

Repeat play

Select [Repeat] to enable or disable 'Repeat all', 'Repeat current song' play.

- Repeat all: All songs in the playlist are repeated.
- Repeat current song: The song that is currently playing is repeated.

Shuffle play

Select [Shuffle] to enable or disable Shuffle play.

- Shuffle: Songs are played in a random order.

Menu

Press the **[MENU]** button, and select the desired function.

- Information: Detailed information on the song that is currently playing is displayed.
- Sound Settings: Audio sound settings can be changed.

✻ NOTICE - Using MP3

Supported audio formats

File System	ISO 9660 Level 1
	ISO 9660 Level 2
	Romeo / Juliet (128 characters)
Audio formats	WAVeform audio format
Compressed audio formats	MPEG1 Audio Layer3
	MPEG2 Audio Layer3
	MPEG2.5 Audio Layer3
	Windows Media Audio Ver 7.X & 8.X

❉ File formats other than the formats above may not be recognized or playable. Information such as file name may not be displayed.

Range of supported file types

1. Bitrate range (Kbps)

BIT RATE(kbps)	MPEG1	MPEG2	MPEG2.5	WMA
	Layer3			High Range
	32	8	8	48
	40	16	16	64
	48	24	24	80
	56	32	32	96
	64	40	40	128
	80	48	48	160
	96	56	56	192
	112	64	64	
	128	80	80	
	160	96	96	
	192	112	112	
	224	128	128	
	256	144	144	
	320	160	160	
	WAV			
	PCM(Stereo)	IMA ADPCM		MS ADPCM
	24	4		4

2. Sampling frequency (Hz)

MPEG1	MPEG2	MPEG2.5	WMA	WAV
44100	22050	11025	32000	44100
48000	24000	12000	44100	48000
32000	16000	8000	48000	

- The sound quality of MP3/WMA compressed and WAV files may vary depending on the bitrate. (A higher bitrate can have better sound quality.)
- The product only recognizes files with the MP3, WMA or WAV extension. Files without one of these extensions are not recognized.

3. Number of recognizable folders and files
- Folders: 255 for CD, 2,000 for USB
- Files: 999 for CD, 6,000 for USB
- No recognition limit for folder hierarchies

4. Character display range (Unicode)
- Filenames: Up to 64 English characters (64 Korean characters)
- Foldernames: Up to 32 English characters (32 Korean characters)

❈ The scroll feature can be used to display file and folder names that are too long to display on the screen. (if equipped)

Languages supported (Unicode support)
- Korean: 2,604 characters
- English: 94 characters
- Common Chinese characters: 4,888 characters
- Special symbols: 986 characters

❈ Japanese/Simplified Chinese characters are not supported.

Compatibility by Disc Type
- Playing MIXED CDs: This device only plays MP3 files with the MP3 CD
- Playing EXTRA CDs: This device only plays tracks with the audio CD.
- Playing multisession CDs: Plays in order of sessions
  - Multisession CD: CD type that includes more than two sessions.
  - Different from Extra CDs, multisession CDs are recorded by sessions and have no media limitation.
- Unauthorised use or duplication of music files are prohibited by law.
- Prolonged use of CD-R/CD-RW discs that do not satisfy related standards and/or specifications could result in product malfunction.

Precautions upon Writing CDs

- In all cases except when creating multisession discs, check the close session option before creating the disc. Though product malfunctions will not occur, some time may be required for the device to check whether the session state is closed (approximately 25 seconds). (Additional time may also be required depending on the number of folders or files.)
- Changing the MP3/WMA file extensions or changing files of other extensions to MP3/WMA may result in product malfunction.
- When naming files with MP3/WMA file extensions, write using only Korean and English. (Languages other than Korean and English are not supported and are displayed as blank.)
- Unauthorised use or duplication of music files are prohibited by law.
- Prolonged use of CD-R/CD-RW discs that do not satisfy related standards and/or specifications could result in product malfunction.

Disc MP3



(1) Repeat

Enable/disable repeat by pressing button **[1]**.

(2) Shuffle

Enable/disable shuffle play by pressing button **[2]**.

(3) List

View a list of all songs by pressing button **[3]**.

Playback

Press the **[MEDIA]** button, and select [Disc MP3].

- When a disc is inserted in the audio system, disc playback begins automatically.

Changing songs

Press the **[SEEK/TRACK]** button to play the previous or next song.

Press and hold the **[SEEK/TRACK]** button to rewind or fast-forward the currently playing song.

Search songs by turning **TUNE** knob, and press the knob to play.

Selecting songs from a list

Select [List] to see a list of songs available for play.

Select and play the desired song.

Repeat play

Select [Repeat] to enable or disable ‘Repeat all’, ‘Repeat current song’ or ‘Repeat folder’ play.

- Repeat all: Repeat all songs in the playlist.
- Repeat current song: The song that is currently playing is repeated.
- Repeat folder: All songs in the current folder are repeated.

Shuffle play

Select [Shuffle] to enable or disable 'Shuffle', 'Shuffle folder' play.

- Shuffle: Songs are played in a random order.
- Shuffle folder: Songs within the current folder are played in random order.

Menu

Press the **[MENU]** button, and select the desired function.

- Information: Detailed information on the song that is currently playing is displayed.
- Sound Settings: Audio sound settings can be changed.

✻ NOTICE

- Using the USB Devices

- **Starting the vehicle whilst a USB device is connected can damage the device. Please disconnect USB devices before starting the vehicle.**
- **Starting the vehicle or stopping the engine whilst an external USB device is connected can result in failure of the external USB device to operate.**
- **Be cautious of static electricity when connecting/disconnecting external USB devices.**
- **An encrypted MP3 player is not recognized when connected as an external device.**
- **External USB devices may not be recognized, depending on the state of the external USB device.**
- **Only products with byte/sectors formatted at 4 KB or lower are recognized.**
- **Only USB devices in FAT12/16/32 format are recognized; NTFS and ExFAT file systems are not recognized.**
- **Some USB devices are not recognized due to compatibility issues.**

(Continued)

(Continued)

- **Do not touch the USB connections.**
- **Connecting and disconnecting USB devices rapidly over a short period of time can cause equipment failure.**
- **Abnormal sounds may be audible when the USB device is disconnected.**
- **Turn the audio off before connecting or disconnecting external USB devices.**
- **Recognition may take longer depending on the type, capacity or file format of the external USB device. This is not a product malfunction.**
- **Use of USB devices for purposes other than playing music files is prohibited.**
- **Image display and video playback are not supported.**
- **Use of USB accessories, including charge and heat though the USB I/F, can lead to reduced product performance or malfunctions. Do not use USB devices or accessories for these purposes.**

(Continued)

(Continued)

- **Use of aftermarket USB hubs and extension cables can result in the vehicle's audio system failing to recognize your USB device. Connect the USB device directly to the multimedia port of your vehicle.**
- **When using high-capacity USB devices with logical drive divisions, only files saved on the highest level logical drive can be played.**
  If applications are loaded on a USB drive, file playback may fail.
- **Some MP3 players, cell phones, digital cameras, etc. (USB devices that are not recognized as mobile storage) may not operate normally when connected.**
- **USB charging may not be supported by some mobile devices.**
- **Operation is guaranteed only for standard (Metal Cover Type) USB Memory drives.**
- **Operation of HDD, CF, SD and memory stick devices is not guaranteed.**

(Continued)

(Continued)

- **DRM (Digital Rights Management) files cannot be played.**
- **SD-type USB memory, CF-type USB memory, and other USB memory devices that require adapters for connection are not supported.**
- **Proper operation of USB HDDs or USB drives with connectors that loosen due to vehicle vibrations is not guaranteed. (iStick, etc.)**
- **USB products that are used as key chains or cell phone accessories may damage the USB jack and affect proper file playback. Please refrain from use. Use only products with plug connectors, as shown in the following illustration.**



- **When MP3 devices or cell phones are connected simultaneously through AUX, BT Audio and USB modes, a popping noise or malfunction may occur.**

USB



(1) Repeat

Enable/disable repeat by pressing button **[1]**.

(2) Shuffle

Enable/disable shuffle play by pressing button **[2]**.

(3) List

View a list of all songs by pressing button **[3]**.

Playback

Press the **[MEDIA]** button, and select [USB].

- Connect a USB drive to the USB port to automatically play files on the USB drive.

Changing songs

Press the **[SEEK/TRACK]** button to play the previous or next song.

Press and hold the **[SEEK/TRACK]** button to rewind or fast-forward the song that is currently playing.

Search songs by turning **TUNE** knob, and press the knob to play.

Selecting songs from a list

Select [List] to view a list of songs available for play.

Select and play the desired song.

Repeat play

Select [Repeat] to enable or disable 'Repeat all', 'Repeat current song', 'Repeat folder' or 'Repeat category' play.

- Repeat all: Repeat all songs.
- Repeat current song: The currently playing song is repeated.
- Repeat folder: All songs in the current folder are repeated.
- Repeat category: Repeat all songs in the current category.

✻ NOTICE

The repeat folder function is available only when songs are playing from the [File] category under [List].

Shuffle play

Select [Shuffle] to enable or disable 'Shuffle', 'Shuffle folder' or 'Shuffle category' play.

- Shuffle: Songs are played in random order.
- Shuffle folder: Songs within the current folder are played in random order.
- Shuffle category: Songs within the current category are played in random order.

Menu

Press the **[MENU]** button, and select the desired function.

- Information: Detailed informationon the currently playing song is displayed.
- Sound Settings: Audio sound settings can be changed.

✻ NOTICE

- Using the iPod® Devices

- To use the audio system's iPod® control function, use the dedicated cable provided with your iPod®.
- Connecting the iPod® to the vehicle during play may result in a loud noise that lasts about one to two seconds. Connect the iPod® to the vehicle after stopping or pausing play.
- Connect the iPod® with the vehicle in the ACC ON state to begin charging.
- When connecting the iPod® cable, be sure to fully push the cable into the port.
- When EQ effects are enabled simultaneously on external devices, such as iPod®s and the audio system, the EQ effects may overlap, causing sound quality deterioration or distortion. Deactivate the EQ function for all external devices, if possible.
- Noise may occur when your iPod® or the AUX port is connected. Disconnect and store separately when not in use.

(Continued)

(Continued)

- There may be noise if the audio system is used with an iPod® or AUX external device connected to the power jack. In these cases, disconnect the iPod® or external device from the power jack.
- Play may be interrupted, or device malfunctions may occur depending on the characteristics of your iPod®/iPhone®.
- Play may fail if your iPhone® is connected through both Bluetooth® and USB. In this case, select Dock connector or Bluetooth® on your iPhone® to change the sound output settings.
- If your software version does not support the communication protocol or your iPod® is not recognized due to device failure, anomalies or defects, iPod® mode cannot be used.
- iPod® nano (5th generation) devices may not be recognized if the battery is low. Charge sufficiently before use.

(Continued)

(Continued)

- The search and song play order in the iPod® device may be different from the search order in the audio system.
- If the iPod® has failed due to an internal defect, please reset the iPod® (consult your iPod® manual).
- Depending on the software version, the iPod® may fail to sync with the system. If the media is removed or disconnected before recognition, the previous mode may not be restored (iPad® cannot be charged).
- Cables other than the 1-meter cable provided with iPod®/iPhone® products may not be recognized.
- When other music apps are used on your iPod®, the system sync function may fail due to malfunction of the iPod® application.

iPod®

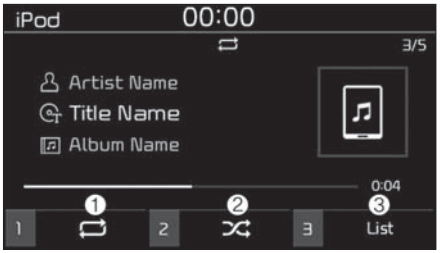

(1) Repeat

Enable/disable repeat by pressing button **[1]**.

(2) Shuffle

Enable/disable shuffle play by pressing button **[2]**.

(3) List

View a list of all songs by pressing button **[3]**.

Playback

Connect your iPod® to the audio USB port, press the **[MEDIA]** button, and select [iPod].

Changing songs

Press the **[SEEK/TRACK]** button to play the previous or next song.

Press and hold the **[SEEK/TRACK]** button to rewind or fast-forward the currently playing song.

Search songs by turning the **TUNE** knob, and press the knob to play.

Selecting songs from a list

Select [List] to see a list of songs available for play.

Select and play the desired song.

Repeat play

Select [Repeat] to enable or disable 'Repeat category', 'Repeat current song' play.

- Repeat category: Repeat all songs in the current category.
- Repeat current song: The currently playing song is repeated.

Shuffle play

Select [Shuffle] to enable or disable 'Shuffle category' play.

- Shuffle category: Songs within the current category are played in random order.

Menu

Press the **[MENU]** button, and select the desired function.

- Information: Detailed info on the currently playing song is displayed.
- Sound Settings: Audio sound settings can be changed.

When other music programs are running



When songs saved on your iPod® are playing through a separate music app, the above screen is displayed.

(1) Play/Pause: Pause or play music by pressing button **[1]**.

(2) iPod Files: Play music files saved on your iPod® by pressing button **[2]**.

(3) Sound Settings: Audio sound settings can be changed by pressing button **[3]**.

Playing iPod Files

Select [iPod Files] to play songs saved on your iPod®.

If there are no songs saved on your iPod®, the [iPod Files] is disabled.

✻ NOTICE

Operation cannot be carried out correctly due to iPod® application malfunction.

✻ NOTICE

- Using Bluetooth® (BT) Audio (if equipped)

- **Bluetooth® Audio mode can only be used if a Bluetooth®-enabled phone is connected. Only devices that support Bluetooth® audio can be used.**
- **If the Bluetooth®-enabled phone is disconnected during play, the music stops.**
- **When the TRACK UP/DOWN buttons are used during Bluetooth® audio streaming, a popping noise or sound interruptions may occur, depending on the cell phone device.**
- **Depending on the cell phone model, the audio streaming function may not be supported.**
- **If a phone call is made or received when music is playing in Bluetooth® Audio mode, the call may mix with the music.**
- **When returning to Bluetooth® Audio mode after ending a call, play might not resume automatically for some cell phone models.**

Precautions for Safe Driving

- Bluetooth® Handsfree is a feature that enables drivers to practice safe driving. Connecting the car audio system with a Bluetooth® phone allows the user to conveniently make calls, receive calls, and manage the phone book. Before using the Bluetooth®, carefully read the contents of this user's manual.
- Excessive use or operations whilst driving may lead to negligent driving practices and be the cause of accidents.
- Do not operate the device excessively whilst driving.
- Viewing the screen for prolonged periods of time is dangerous and may lead to accidents.
- When driving, view the screen only for short periods of time.

Bluetooth® (BT) Audio (if equipped)

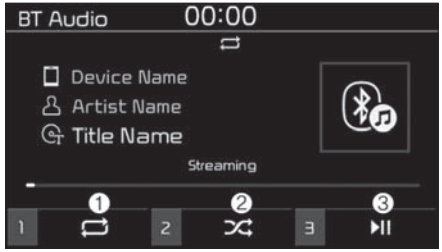

(1) Repeat

Enable/disable repeat by pressing button **[1]**.

(2) Shuffle

Enable/disable shuffle play by pressing button **[2]**.

(3) Play/Pause

Pause or play music by pressing button **[3]**.

✻ NOTICE

Some cell phones may not support this function.

Playback

Press the **[MEDIA]** button, and select [BT Audio].

Changing songs

Press the **[SEEK/TRACK]** button, to play the previous or next song.

✻ NOTICE

Some cell phones may not support this function.

Repeat play

Select [Repeat] to enable or disable 'Repeat all', 'Repeat current song' or 'Repeat category' play.

- Repeat all: Repeat all songs.
- Repeat current song: The currently playing song is repeated.
- Repeat category: Repeat all songs in the current category.

✻ NOTICE

The repeat play function is engaged, depending on the operation of the connected Bluetooth® device.

Shuffle play

Select [Shuffle] to enable or disable 'Shuffle', 'Shuffle category' play.

- Shuffle: Songs are played in random order.
- Shuffle category: Songs within the current category are played in random order.

✻ NOTICE

The shuffle function is engaged, depending on the operation of the connected Bluetooth® device.

Menu

Press the **[MENU]** button, and select the desired function.

- Connections: The currently connected Bluetooth® device can be changed.
- Sound Settings: Audio sound settings can be changed.

AUX

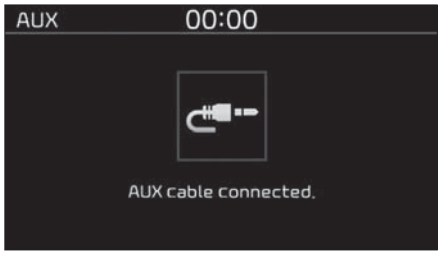

Running AUX

Press the **[MEDIA]** button, and select [AUX].

- Connect the external device connection jack to the AUX terminal to run AUX.

Menu

Press the **[MENU]** button and select the desired function.

- Sound Settings: Audio sound settings can be changed.

Phone (if equipped)

✻ NOTICE
- Using Bluetooth® (BT) Phone

- **Bluetooth® is a near-field wireless networking technology that uses the 2.4 GHz frequency to connect various devices within a certain distance wirelessly.**
- **The technology is used in PCs, peripherals, Bluetooth® phones, tablet PCs, household appliances and automobiles. Devices supporting Bluetooth® can exchange data at high speeds without physical cable connections.**
- **Bluetooth® Handsfree devices enable convenient access to phone functions through cell phones equipped with Bluetooth®.**
- **Some Bluetooth® devices may not be supported by the Bluetooth® Handsfree function.**
- **When Bluetooth® is connected and calls are attempted through a connected cell phone from outside the vehicle, the call is connected through the Bluetooth® Handsfree function of the vehicle.**

(Continued)

(Continued)

- **Please be sure to disconnect the Bluetooth® Handsfree function through your Bluetooth® device or the audio screen.**
- **The Bluetooth® Handsfree function helps drivers to drive safely. By connecting a Bluetooth®-enabled phone to the vehicle's audio system, phone calls can be made and received through the audio system and contacts can be managed. Consult the user manual before use.**
- **Excessive manipulation of controls whilst driving, making it difficult to pay attention to the road ahead, can lead to accidents. Do not operate the device excessively whilst driving.**
- **Looking at the screen for a prolonged time increases the risk of accidents. Keep time spent looking at the screen to a minimum.**

Precautions when connecting Bluetooth® devices

- The vehicle supports the following Bluetooth® functions. Some Bluetooth® devices may not support some functions.
  1) Bluetooth® Handsfree phone calls
  2) Operations during a call (Private, Switch, Out Vol. controls)
  3) Download call history saved to the Bluetooth® device
  4) Download contacts saved to the Bluetooth® device
  5) Automatic contacts/call history download when Bluetooth® is connected
  6) Automatic Bluetooth® device connection when the vehicle is started
  7) Bluetooth® audio streaming playback
- Before connecting the audio system to your device, make sure your device supports Bluetooth®.

- Even if your device supports Bluetooth®, a Bluetooth® connection cannot be established if the device's Bluetooth® function is switched off. Search and connect with the Bluetooth® function enabled.
- Pair or connect Bluetooth® devices to the audio system with the vehicle at a standstill.
- If a Bluetooth® connection is lost due to abnormal conditions whilst a Bluetooth® device is connected (communication range exceeded, device power OFF, communication errors, etc.), the disconnected Bluetooth® device is searched for and automatically reconnected.
- If you want to disable the Bluetooth® device auto-connect function, turn the Bluetooth® function OFF on your device. Consult the user manuals for individual devices to see whether Bluetooth® is supported.
- Handsfree call quality and volume may vary depending on the type of Bluetooth® device.
- Some Bluetooth® devices are subject to intermittent Bluetooth® connection failures. In this case, use the following method.
  1) Turn the Bluetooth® function off on your Bluetooth® device ➟ Turn it on and try again.
  2) Delete the paired device from both the audio system and Bluetooth® device, then pair again.
  3) Power down your Bluetooth® device ➟ Turn it on and try again.
  4) Completely remove the battery from your Bluetooth® device; reinsert it, reboot, and attempt connection.
  5) Restart the vehicle and reattempt connection.

Pairing a Bluetooth® device

Information on pairing Bluetooth® devices

- Pairing refers to the process of pairing Bluetooth® cell phones or devices with the system prior to connection. This is a necessary procedure for Bluetooth® connection and usage.
- Up to five devices can be paired.
- Pairing Bluetooth® device is not allowed whilst vehicle is moving.

Pairing the first Bluetooth® device

Press the **[PHONE]** button on the audio system or the **[CALL]** button on the steering wheel remote control ➟ Search for the vehicle from the Bluetooth® device, and pair ➟ Enter the passkey on the Bluetooth® device or approve passkey ➟ Bluetooth® pairing completed.

1. When the **[PHONE]** button on the audio or the **[CALL]** button on the steering wheel remote control is pressed, the following screen is displayed. Devices can now be paired.



(1) Vehicle name: Searched name in Bluetooth® device.

✻ NOTICE

The vehicle name in the image above is an example. Refer to your device for the actual name of your device.

2. Search for available Bluetooth® devices in the Bluetooth® menu of your Bluetooth® device (cell phone, etc.).
3. Confirm that the vehicle name in your Bluetooth® device matches the vehicle name shown on the audio screen, then select it.

4-1. For devices that require passkey entry, a passkey entry screen is shown on your Bluetooth® device.

- Enter the passkey '0000', in your Bluetooth device.

4-2. For devices that require passkey confirmation, the following screen is shown on the audio system. A 6-digit passkey input screen is shown in the Bluetooth® device.

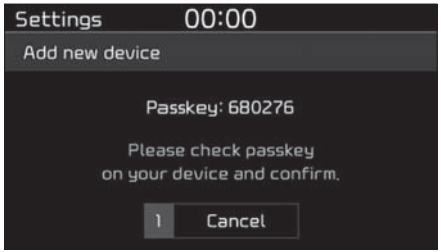

- After confirming that the 6-digit passkey on the audio screen and the Bluetooth® device are identical, select [OK] in your Bluetooth® device.

✻ NOTICE

The 6-digit passkey in the image above is an example. Refer to your vehicle for the actual passkey.

Pairing a second Bluetooth® device

Press the **[SETUP]** button on the audio system ➟ Select [Phone] ➟ Select [Connections] ➟ Select [Add new device].

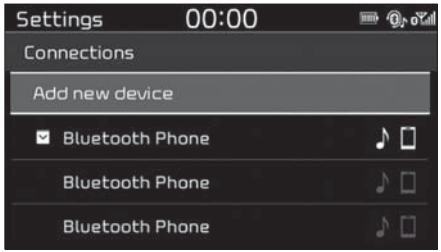

- The pairing procedure from this point is identical to [Pairing the first Bluetooth device].

✻ NOTICE

- **Bluetooth® standby mode lasts for three minutes. If a device is not paired within three minutes, pairing is cancelled. Start over from the beginning.**
- **For most Bluetooth® devices, a connection is established automatically after pairing. Some devices, however, require separate confirmation when connecting after pairing. Be sure to check your Bluetooth® device after pairing to confirm that it has connected.**

Connecting Bluetooth® devices

If there are no connected devices

Press the **[PHONE]** button on the audio system or the **[CALL]** button in the steering wheel remote control ➟ List of paired Bluetooth® devices ➟ Select the desired Bluetooth® device from the list ➟ Connect Bluetooth®.

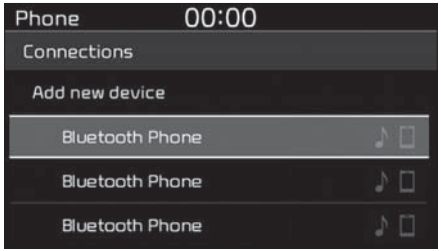

If there are connected devices

Press the **[PHONE]** button on the audio system ➟ Select [Settings] ➟ Select [Connections] ➟ Select Bluetooth® device to connect ➟ Select [Connect] ➟ Connect Bluetooth®.

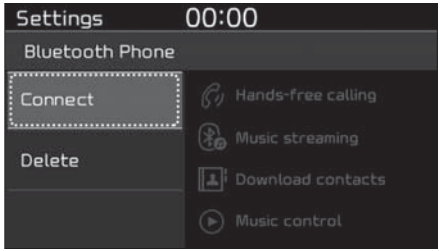

✻ NOTICE

- **Only one Bluetooth® device can be connected at a time.**
- **When a Bluetooth® device is connected, other devices cannot be paired.**

Accepting/rejecting phone calls

Receiving phone calls with Bluetooth® connected.



(1) Caller name: If the caller number is in your contacts, the corresponding name is displayed.

(2) Incoming phone number: Incoming phone number is displayed.

(3) Accept: Accept call.

(4) Reject: Reject call.

✻ NOTICE

- **When the incoming call screen is displayed, audio mode and the settings screen cannot be shown. Only call volume control is supported.**
- **Some Bluetooth® devices may not support the call reject function.**
- **Some Bluetooth® devices may not support the phone number display function.**

Operation during calls

Incoming call with Bluetooth® connected ➟ Select [Accept].



(1) Call duration: Call duration display.

(2) Caller name: If the caller number is in your contacts, the corresponding name is displayed.

(3) Incoming phone number: Incoming phone number is displayed.

(4) Private: Call is transferred to a cell phone.

(5) End: End call.

(6) Mute: Block outgoing voice.

Menu

Press the **[MENU]** button, and select the desired function.

- Switch: Switch between calls if connected to two or more calls.
- Microphone Volume(Outgoing Volume): Adjust outgoing voice volume.

✻ NOTICE

- **Some Bluetooth® devices may not support the Private function.**
- **The outgoing voice volume may vary depending on the type of Bluetooth® device. If the outgoing voice volume is too high or low, adjust the Microphone Volume (Outgoing Volume).**
- **The Switch menu will only be displayed if connected to two or more calls.**

Favourites

Press the **[PHONE]** button on the audio system ➟ Select [Favourites] ➟ Favourites list displayed.

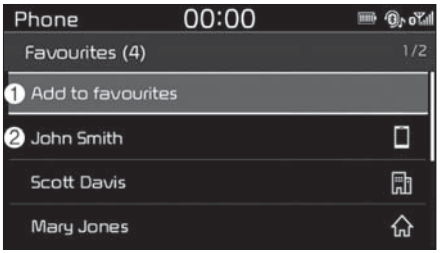

(1) Add to favourites: Add a downloaded phone number to favourites.

(2) Favourites list: A list of paired favourite is displayed Connect a call when selected.

Menu

Press the **[MENU]** button, and select the desired function.

- Delete: Delete a saved favourite.

✻ NOTICE

- **Up to 20 favourites can be saved for each connected Bluetooth® device.**
- **Favourites can be accessed when the Bluetooth® device they were paired from is connected.**
- **The audio system does not download favourites from Bluetooth® devices. Favourites must be newly saved before use.**
- **To add to favourites, contacts must be downloaded first.**
- **Saved favourites are not updated even if the contacts of the connected Bluetooth® device are changed. In this case, favourites need to be deleted and added again.**

Call history

Press the **[PHONE]** button on the audio system ➟ Select [Call history] ➟ Call history is displayed.

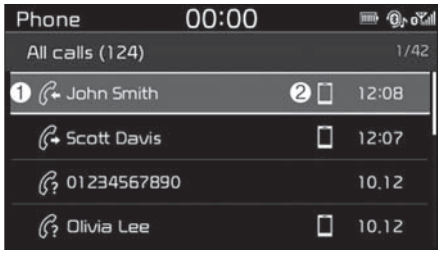

(1) Call history: Display the downloaded call history list.

Connect a call when selected.

(2) Call duration: Display the time the call was connected.

Menu

Press the **[MENU]** button, and select the desired function.

- All calls: Display all call history.
- Missed calls: Display missed calls.
- Dialled calls: Display dialled calls.
- Received calls: Display received calls.
- Download: Download call history from connected Bluetooth® devices.

✻ NOTICE

- **Up to 50 dialled, received and missed calls are saved.**
- **When the latest call history is received, the existing call history is deleted.**

Contacts

Press the **[PHONE]** button on the audio system ➟ Select [Contacts] ➟ Select letter (ABC) ➟ Contacts displayed.

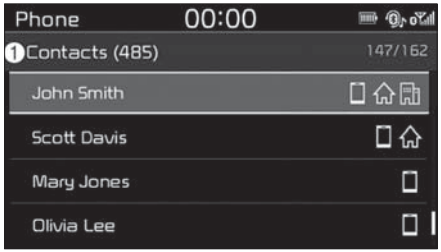

(1) Contacts: Display downloaded contacts.

If one phone number is saved, the number will be dialled when selected.

If two or more phone numbers are saved, a list of saved numbers will be displayed when selected.

Menu

Press the **[MENU]** button, and select the desired function.

- Download: Download contacts from connected Bluetooth® devices.

✻ NOTICE

- **Only supported contacts format can be downloaded and displayed from the Bluetooth® device, contacts from some applications will not be included.**
- **Up to 2,000 contacts can be saved.**
- **In some cases, additional confirmation from your Bluetooth® device is necessary when downloading contacts. If downloading of contacts unsuccessful, consult your Bluetooth® device's settings or the audio screen to approve the download.**
- **Contacts without phone numbers are not displayed.**

Settings

Press the **[PHONE]** button on the audio ➟ Select [Settings].

- For more details, refer to Settings ➟ Bluetooth page.

Setup

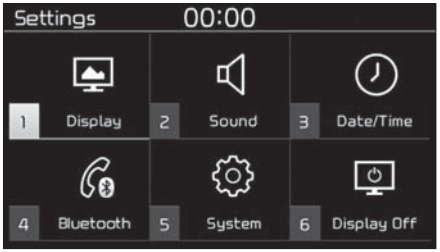

Access Display, Sound, Date/Time, Bluetooth*, System and Display Off settings.

Press the **[SETUP]** button on the audio system.

* if equipped

Display

Press the **[SETUP]** button on the audio system ➟ Select [Display].

- Dimming mode(Mode): Adjusts the brightness automatically based on headlamp use.
- Brightness(Illumination): The brightness of the audio screen can be changed.
- Screensaver: Set the information displayed when the audio system is switched off or the screen is turned off.
- Text Scroll: If text is too long to be displayed on the screen, enable the text scroll function. (if equipped)

Sound

Press the **[SETUP]** button on the audio system ➟ Select [Sound].

- Position: Sound balance and fader can be adjusted.
- Equaliser(Tone): Sound tone colour can be adjusted.
- Speed dependent volume control: Automatically adjust volume based on vehicle speed.
- Rear parking sensors prioritised (Back-up Warning Priority): Automatically lower audio volume whilst reversing.

Date/Time

Press the **[SETUP]** button on the audio system ➟ Select [Date/Time].

- Set time: Set the time displayed on the audio screen.
- Time format: Choose between 12-hour and 24-hour time formats.
- Set date: Set the date displayed on the audio screen.

Bluetooth (if equipped)

Press the **[SETUP]** button on the audio system ➟ Select [Bluetooth].

- Connections: Control pairing, deletion, connection and disconnection of Bluetooth® devices.
- Auto connection priority: Set the connection priority of Bluetooth® devices when the vehicle is started.
- Update contacts: Contacts can be downloaded from connected Bluetooth® devices.
- Bluetooth voice guidance: Play or mute voice prompts for Bluetooth® device pairing, connection and errors. (if equipped)

✻ NOTICE

- **When paired devices are deleted, the call history and contacts of the device saved to the audio system are deleted.**
- **For Bluetooth® connections with low connection priority, some time may be required for the connection to be established.**
- **Contacts can be downloaded only from the currently connected Bluetooth® device.**
- **If no Bluetooth® device is connected, the Update contacts button is disabled.**
- **If the language setting is Slovakian or Hungarian, Bluetooth voice guidance is not supported. (if equipped)**

System

Press the **[SETUP]** button on the audio system ➟ Select [System].

- Language: Change the user language.
- Default: Reset the audio system.

✻ NOTICE

The system resets to the default values, and all saved data and settings are lost.

Display Off

To prevent glare, the screen can be turned off with the audio system in operation.

Press the **[SETUP]** button on the audio system➟ Select [Display Off].

✻ NOTICE

Use 'Screensaver' to set the information to be displayed when the screen is turned off.

Driving your vehicle

Before driving 6-4
- Before entering vehicle 6-4
- Necessary inspections 6-4
- Before starting 6-4

Engine start/stop button 6-6
- Illuminated engine start/stop button 6-6
- Engine start/stop button position 6-6
- Starting the engine 6-9

Automatic transaxle 6-11
- Automatic transaxle operation 6-11
- Good driving practices 6-17

All wheel drive (AWD) 6-19
- All Wheel Drive (AWD) transfer mode selection . . . 6-20
- For safe all wheel drive operation 6-21
- Reducing the risk of a rollover 6-24

Brake system 6-26
- Power brakes 6-26
- Electronic Parking Brake (EPB) 6-18
- AUTO HOLD (if equipped) 6-35
- Anti-lock brake system (ABS) 6-37
- Electronic stability control (ESC) 6-40
- Vehicle stability management (VSM) 6-44
- Hill-start assist control (HAC) 6-46
- Good braking practices 6-46
- Downhill Brake Control (DBC) 6-48
- Good braking practices 6-50

Cruise Control system 6-51
- Cruise control switch 6-52
- To set cruise control speed 6-52
- To increase cruise control set speed 6-53
- To decrease the cruising speed 6-54

Manual speed limit assist 6-65

Economical operation 6-64

Special driving conditions 6-160

Winter driving 6-172

Trailer Towing 6-177

Vehicle weight 6-180
- Base kerb weight 6-86
- Vehicle kerb weight 6-86
- Cargo weight 6-86
- GAW (Gross axle weight) 6-86
- GAWR (Gross axle weight rating) 6-86
- GVW (Gross vehicle weight) 6-86
- GVWR (Gross vehicle weight rating) 6-86
- Overloading 6-86

⚠ WARNING - ENGINE EXHAUST CAN BE DANGEROUS!

Engine exhaust fumes can be extremely dangerous. If, at any time, you smell exhaust fumes inside the vehicle, open the windows immediately.

- **Do not inhale exhaust fumes.**

  Exhaust fumes contain carbon monoxide, a colourless, odourless gas that can cause unconsciousness and death by asphyxiation.

- **Be sure the exhaust system does not leak.**

  The exhaust system should be checked whenever the vehicle is raised to change the oil or for any other purpose. If you hear a change in the sound of the exhaust or if you drive over something that strikes the underneath side of the vehicle, have the system checked by a professional workshop. Kia recommends to visit an authorised Kia dealer/service partner.

- **Do not run the engine in an enclosed area.**

  Letting the engine idle in your garage, even with the garage door open, is a hazardous practice. Never run the engine in your garage any longer than it takes to start the engine and back the vehicle out.

- **Avoid idling the engine for prolonged periods with people inside the vehicle.**

  If it is necessary to idle the engine for a prolonged period with people inside the vehicle, be sure to do so only in an open area with the air intake set at "Fresh" and fan operating at one of the higher speeds so fresh air is drawn into the interior.

If you must drive with the tailgate/trunk open because you are carrying objects that make this necessary:

1. Close all windows.
2. Open side vents.
3. Set the air intake control at "Fresh", the air flow control at "Floor" or "Face" and the fan at one of the higher speeds.

To assure proper operation of the ventilation system, be sure the ventilation air intakes located just in front of the windscreen are kept clear of snow, ice, leaves or other obstructions.

BEFORE DRIVING

Before entering vehicle

- Be sure that all windows, outside mirror(s), and outside lights are clean.
- Check the condition of the tyres.
- Check under the vehicle for any sign of leaks.
- Be sure there are no obstacles behind you if you intend to back up.

Necessary inspections

Fluid levels, such as engine oil, engine coolant, brake fluid, and washer fluid should be checked on a regular basis, with the exact interval depending on the fluid. Further details are provided in chapter 8, “Maintenance”.

⚠ WARNING

Driving whilst distracted can result in a loss of vehicle control, that may lead to an accident, severe personal injury, and death. The driver’s primary responsibility is in the safe and legal operation of a vehicle, and use of any handheld devices, other equipment, or vehicle systems which take the driver’s eyes, attention and focus away from the safe operation of a vehicle or which are not permissible by law should never be used during operation of the vehicle.

Before starting

- Close and lock all doors.
- Position the seat so that all controls are easily reached.
- Adjust the inside and outside rearview mirrors.
- Be sure that all lights work.
- Check all gauges.
- Check the operation of warning lights when the ignition switch is turned to the ON position.
- Release the parking brake and make sure the brake warning light goes out.

For safe operation, be sure you are familiar with your vehicle and its equipment.

⚠ WARNING

All passengers must be properly belted whenever the vehicle is moving. Refer to "Seat belts" in chapter 3 for more information on their proper use.

⚠ WARNING

Always check the surrounding areas near your vehicle for people, especially children, before putting a vehicle into "D (Drive)" or "R (Reverse)".

⚠ WARNING - Driving under the influence of alcohol or drugs

Drinking and driving is dangerous. Drunk driving is the number one contributor to the highway death toll each year. Even a small amount of alcohol will affect your reflexes, perceptions and judgement. Driving whilst under the influence of drugs is as dangerous or more dangerous than driving drunk.

You are much more likely to have a serious accident if you drink or take drugs and drive.

If you are drinking or taking drugs, don't drive. Do not ride with a driver who has been drinking or taking drugs. Choose a designated driver or call a cab.

⚠ WARNING

- **When you intend to park or stop the vehicle with the engine on, be careful not to depress the accelerator pedal for a long period of time. It may overheat the engine or exhaust system and cause fire.**
- **When you make a sudden stop or turn the steering wheel rapidly, loose objects may drop on the floor and it could interfere with the operation of the foot pedals, possibly causing an accident. Keep all things in the vehicle safely stored.**
- **If you do not focus on driving, it may cause an accident. Be careful when operating what may disturb driving such as audio or heater. It is the responsibility of the driver to always drive safely.**

ENGINE START/STOP BUTTON (IF EQUIPPED)

Illuminated engine start/stop button



OUM058004R

Whenever the front door is opened, the engine start/stop button will illuminate for your convenience. The light will go off after about 30 seconds when the door is closed. It will also go off immediately when the engine start/stop button is ON position.

Engine start/stop button position

OFF



Not illuminated

With manual transaxle

To turn off the engine (START/RUN position) or vehicle power (ON position), stop the vehicle then press the engine start/stop button.

With automatic transaxle

To turn off the engine (START/RUN position) or vehicle power (ON position), press the engine start/stop button with the shift lever in the P (Park) position. When you press the engine start/stop button without the shift lever in the P (Park) position, the engine start/stop button will not change to the OFF position but to the ACC position.

Vehicles equipped with anti-theft steering column lock

The steering wheel locks when the engine start/stop button is in the OFF position to protect you against theft.

It locks when the door is opened.

If the steering wheel is not locked properly when you open the driver's door, the warning chime will sound. Try locking the steering wheel again. If the problem is not solved, have the system checked by a professional workshop. Kia recommends to visit an authorised Kia dealer/service partner.

In addition, if the engine start/stop button is in the OFF position after the driver's door is opened, the steering wheel will not lock and the warning chime will sound. In such a situation, close the door. Then the steering wheel will lock and the warning chime will stop.

✻ NOTICE

If the steering wheel doesn't unlock properly, the engine start/stop button will not work. Press the engine start/stop button whilst turning the steering wheel right and left to release the tension.

⚠ CAUTION

You are able to turn off the engine (START/RUN) or vehicle power (ON), only when the vehicle is not in motion. In an emergency situation whilst the vehicle is in motion, you are able to turn the engine off and to the ACC position by pressing the engine start/stop button for more than 2 seconds or 3 times successively within 3 seconds. If the vehicle is still moving, you can restart the engine without depressing the brake pedal by pressing the engine start/stop button with the shift lever in the N (Neutral) position.

ACC(Accessory)



Amber

With manual transaxle

Press the engine start/stop button when the button is in the OFF position without depressing the clutch pedal.

With automatic transaxle

Press the engine start/stop button whilst it is in the OFF position without depressing the brake pedal.

The steering wheel unlocks (if equipped with anti-theft steering column lock) and electrical accessories are operational.

If the engine start/stop button is in the ACC position for more than 1 hour, the button is turned off automatically to prevent battery discharge.

ON



Redish orange

With manual transaxle

Press the engine start/stop button when the button is in the ACC position without depressing the clutch pedal.

With automatic transaxle

Press the engine start/stop button whilst it is in the ACC position without depressing the brake pedal.

The warning lights can be checked before the engine is started. Do not leave the engine start/stop button in the ON position for a long time. The battery may discharge, because the engine is not running.

START/RUN



Not illuminated

With manual transaxle

To start the engine, depress the clutch pedal and brake pedal, then press the engine start/stop button with the shift lever in the N (Neutral) position.

With automatic transaxle

To start the engine, depress the brake pedal and press the engine start/stop button with the shift lever in the P (Park) or the N (Neutral) position. For your safety, start the engine with the shift lever in the P (Park) position.

✻ NOTICE

If you press the engine start/stop button without depressing the clutch pedal for manual transaxle vehicles or without depressing the brake pedal for automatic transaxle vehicles, the engine will not start and the engine start/stop button changes as follow:
OFF ➔ACC ➔ ON ➔ OFF or ACC

✻ NOTICE

If you leave the engine start/stop button in the ACC or ON position for a long time, the battery will discharge.

⚠ WARNING

- **Never press the engine start/stop button whilst the vehicle is in motion. This would result in loss of directional control and braking function, which could cause an accident.**
- **The anti-theft steering column lock (if equipped) is not a substitute for the parking brake. Before leaving the driver's seat, always make sure the shift lever is engaged in P (Park), set the parking brake fully and shut the engine off. Unexpected and sudden vehicle movement may occur if these precautions are not taken.**

(Continued)

(Continued)

- Never reach for the engine start/ stop button or any other controls through the steering wheel whilst the vehicle is in motion. The presence of your hand or arm in the area could cause loss of vehicle control, an accident and serious bodily injury or death.
- Do not place any movable objects around the driver's seat as they may move whilst driving, interfere with the driver and lead to an accident.

Starting the engine

⚠ WARNING

- Always wear appropriate shoes when operating your vehicle. Unsuitable shoes (high heels, ski boots,etc.) may interfere with your ability to use the brake, accelerator and clutch pedal.
- Do not start the vehicle with the accelerator pedal depressed. The vehicle can move and lead to an accident.
- Wait until the engine rpm is normal. The vehicle may suddenly move if the brake padel is released when the rpm is high.

✻ NOTICE - Kick down mechanism (if equipped)

If your vehicle is equipped with a kick down mechanism in the accelerator pedal, it prevents you from driving at full throttle unintentionally by making the driver require increased effort to depress the accelerator pedal. However, if you depress the pedal more than approximately 82%, the vehicle can be at full throttle and the accelerator pedal will be easier to depress. This is not a malfunction but a normal condition.

Starting the petrol engine

1. Carry the smart key or leave it inside the vehicle.
2. Make sure the parking brake is firmly applied.
3. **Automatic transaxle** - Place the transaxle shift lever in P (Park). Depress the brake pedal fully.

   You can also start the engine when the shift lever is in the N (Neutral) position.
4. Press the engine start/stop button.

   It should be started without depressing the accelerator.
5. Do not wait for the engine to warm up whilst the vehicle remains stationary.

   Start driving at moderate engine speeds. (Steep accelerating and decelerating should be avoided.)


OUM058005R

✻ NOTICE

- **If the battery is weak or the smart key does not work correctly, you can start the engine by pressing the engine start/stop button with the smart key.**
  The side with the lock button should be contacted directly.
  When you press the engine start/stop button directly with the smart key, the smart key should contact the button at a right angle.

(Continued)

(Continued)

- **When the stop lamp fuse is blown, you cannot start the engine normally.**
  Replace the fuse with a new one. If it is not possible, you can start the engine by pressing the engine start/stop button for 10 seconds whilst it is in the ACC position. The engine can start without depressing the brake pedal. But for your safety always depress the brake and clutch pedal before starting the engine.

⚠ CAUTION

Do not press the engine start/stop button for more than 10 seconds except when the stop lamp fuse is blown.

AUTOMATIC TRANSAXLE (IF EQUIPPED)

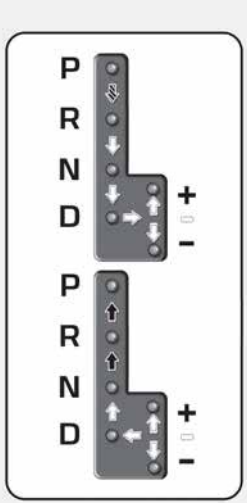

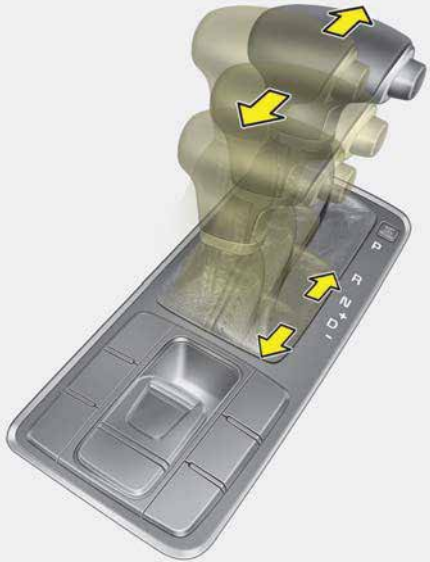

Depress the brake pedal and the lock release button when shifting.
(If the shift lock system is not equipped, it is not necessary to depress the brake pedal. However, it is recommended to depress the brake pedal to avoid inadvertent movement of the vehicle.)

Press the lock release button when shifting.

The shift lever can be shifted freely.

❊ The above illustration may defer depending on different options.
Depress the brake pedal when shifting the lever for safety

OUM058007R

Automatic transaxle operation

The automatic transaxle has 6 or 8 forward speeds and one reverse speed. The individual speeds are selected automatically, depending on the position of the shift lever.

✻ NOTICE

The first few shifts on a new vehicle, if the battery has been disconnected, may be somewhat abrupt. This is a normal condition, and the shifting sequence will adjust after shifts are cycled a few times by the TCM (Transaxle Control Module) or PCM (Powertrain Control Module).

For smooth operation, depress the brake pedal when shifting from N (Neutral) to a forward or reverse gear.

⚠ WARNING - Automatic transaxle

- **Always check the surrounding areas near your vehicle for people, especially children, before shifting a vehicle into D (Drive) or R (Reverse).**
- **Before leaving the driver's seat, always make sure the shift lever is in the P (Park) position; then set the parking brake fully and shut the engine off. Unexpected and sudden vehicle movement can occur if these precautions are not followed in the order identified.**
- **Do not use the engine brake (shifting from a high gear to lower gear) rapidly on slippery roads.**

  The vehicle may slip causing an accident.

⚠ CAUTION

- ***To avoid damage to your transaxle, do not accelerate the engine in R (Reverse) or any forward gear position with the brakes on.***
- ***When stopped on an upgrade, do not hold the vehicle stationary with engine power. Use the service brake or the parking brake.***
- ***Do not shift from N (Neutral) or P (Park) into D (Drive), or R (Reverse) when the engine is above idle speed.***

Transaxle ranges

The indicator lights in the instrument cluster displays the shift lever position when the ignition switch is in the ON position.

P (Park)

Always come to a complete stop before shifting into P (Park). This position locks the transaxle and prevents the front wheels from rotating.

⚠ WARNING

- **Shifting into P (Park) whilst the vehicle is in motion will cause the drive wheels to lock which will cause you to lose control of the vehicle.**
- **Do not use the P (Park) position in place of the parking brake. Always make sure the shift lever is latched in the P (Park) position and set the parking brake fully.**
- **Never leave a child unattended in a vehicle.**

⚠ CAUTION

The transaxle may be damaged if you shift into P (Park) whilst the vehicle is in motion.

R (Reverse)

Use this position to drive the vehicle backward.

⚠ CAUTION

Always come to a complete stop before shifting into or out of R (Reverse); you may damage the transaxle if you shift into R (Reverse) whilst the vehicle is in motion, except as explained in "Rocking the vehicle", in this manual.

N (Neutral)

The wheels and transaxle are not engaged. The vehicle will roll freely even on the slightest incline unless the parking brake or service brakes are applied.

⚠ WARNING

Do not drive with the shift lever in N (Neutral).

The engine brake will not work and lead to an accident.

- Parking in N (Neutral) gear

Follow below steps when parking and you want the vehicle to move when pushed.

1. After parking your vehicle, depress the brake pedal and move the shift lever to [P] with the ignition button in [ON] or whilst the engine is running.
2. If the parking brake is applied unlock the parking brake.
   - For EPB (Electronic Parking Brake) equipped vehicles, push the brake pedal with the ignition button in [ON] or whilst the engine is running to disengage the parking brake. If [AUTO HOLD] function is used whilst driving (If [AUTO HOLD] indicator is on in the cluster), press [AUTO HOLD] switch and [AUTO HOLD] function should be turn off.
3. Whilst pressing the brake pedal, turn the ignition button [OFF].
   - For smart key equipped vehicles, the ignition switch can be moved to [OFF] only when the shift lever is in [P].
4. Change the gear shift lever to [N] (Neutral) whilst pressing the brake pedal and pressing down a tool (e.g. flathead screw-driver) into the [SHIFT LOCK RELEASE] access hole at the same time. Then, the vehicle will move when external force is applied.

⚠ CAUTION

- ***With the exception of parking in neutral gear, always park the vehicle in [P] (Park) for safety and engage the parking brake.***
- ***Before parking in [N] (Neutral) gear, first make sure the parking ground is level and flat. Do not park in [N] gear on any slopes or gradients.***

  If parked and left in [N], the vehicle may move and cause serious damage and injury.
- ***After the ignition switch has been turned off, the Electronic Parking Brake cannot be disengaged.***
- ***For EPB (Electronic Parking Brake) equipped vehicles with [AUTO HOLD] function used whilst driving, if the ignition button has been turned [OFF], the Electronic Parking Brake will be engaged automatically. Therefore, [AUTO HOLD] function should be turned off before the ignition button is turned off.***

D (Drive)

This is the normal forward driving position. The transaxle will automatically shift through a 6 or 8 gear sequence, providing the best fuel economy and power.

For extra power when passing another vehicle or climbing grades, depress the accelerator pedal fully (more than 82%) until the kick down mechanism (if equipped) works with a clicking noise, at which time the transaxle will automatically downshift to the next lower gear.

✻ NOTICE

- **Always come to a complete stop before shifting into D (Drive).**
- **A clicking noise heard from the kick down mechanism by depressing the accelerator pedal fully is a normal condition.**



Manual mode

Whether the vehicle is stationary or in motion, manual mode is selected by pushing the shift lever from the D (Drive) position into the manual gate. To return to D (Drive) range operation, push the shift lever back into the main gate.

In manual mode, moving the shift lever backwards and forwards will allow you to make gearshifts rapidly.

Up (+) : Push the lever forward once to shift up one gear.

Down (-) : Pull the lever backwards once to shift down one gear.

✻ NOTICE

- **In manual mode, the driver must execute upshifts in accordance with road conditions, taking care to keep the engine speed below the red zone.**
- **In manual mode, only the 6 or 8 forward gears can be selected. To reverse or park the vehicle, move the shift lever to the R (Reverse) or P (Park) position as required.**
- **In manual mode, downshifts are made automatically when the vehicle slows down. When the vehicle stops, 1st gear is automatically selected.**
- **In manual mode, when the engine rpm approaches the red zone shift points are varied to upshift automatically.**
- **To maintain the required levels of vehicle performance and safety, the system may not execute certain gearshifts when the shift lever is operated.**

(Continued)

(Continued)

- **When driving on a slippery road, push the shift lever forward into the +(up) position. This causes the transaxle to shift into the 2nd gear which is better for smooth driving on a slippery road. Push the shift lever to the -(down) side to shift back to the 1st gear.**

Paddle shifter (if equipped)

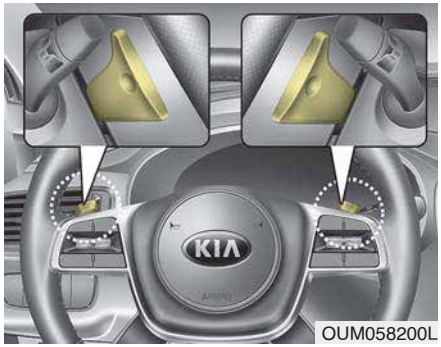

The paddle shifter is available when the shift lever is in the D (Drive) position or the manual mode.

With the shift lever in the D position

The paddle shifter will operate when the vehicle speed is more than 10km/h.

Pull the [+] or [-] paddle shifter once to shift up or down one gear and the system changes from automatic mode to manual mode.

When the vehicle speed is lower than 10km/h, if you depress the accelerator pedal for more than 5 seconds or if you move the shift lever from D (Drive) to manual Mode and move it from manual Mode to D (Drive) again, the system changes from manual mode to automatic mode.

With the shift lever in the sports mode

Pull the [+] or [-] paddle shifter once to shift up or down one gear.

✻ NOTICE

If the [+] and [-] paddle shifters are pulled at the same time, gear shift may not occur.

Shift lock system (if equipped)

For your safety, the automatic transaxle has a shift lock system which prevents shifting the transaxle from P (Park) or N (Neutral) into R (Reverse) unless the brake pedal is depressed.

To shift the transaxle from P (Park) or N (Neutral) into R (Reverse):

1. Depress and hold the brake pedal.
2. Start the engine or turn the ignition switch to the ON position.
3. Move the shift lever.

If the brake pedal is repeatedly depressed and released with the shift lever in the P (Park) position, a chattering noise near the shift lever may be heard. This is a normal condition.

⚠ WARNING

Always fully depress the brake pedal before and whilst shifting out of the P (Park) position into another position to avoid inadvertent motion of the vehicle which could injure persons in or around the vehicle.



Shift-lock override

If the shift lever cannot be moved from the P (Park) or N (Neutral) position into R (Reverse) position with the brake pedal depressed, continue depressing the brake, then do the following:

1. Carefully remove the cap (1) covering the shift-lock override access hole.
2. Insert a screwdriver into the access hole and press down on the screwdriver.
3. Move the shift lever.
4. Have the system inspected by a professional workshop. Kia recommends to visit an authorised Kia dealer/service partner.

Ignition key interlock system (if equipped)

The ignition key cannot be removed unless the shift lever is in the P (Park) position.

Good driving practices

- Never move the shift lever from P (Park) or N (Neutral) to any other position with the accelerator pedal depressed.
- Never move the shift lever into P (Park) when the vehicle is in motion.
- Be sure the vehicle is completely stopped before you attempt to shift into R (Reverse) or D (Drive).
- Never take the vehicle out of gear and coast down a hill. This may be extremely hazardous. Always leave the vehicle in gear when moving.
- Do not "ride" the brakes. This can cause them to overheat and malfunction. Instead, when you are driving down a long hill, slow down and shift to a lower gear. When you do this, engine braking will help slow down the vehicle.
- Slow down before shifting to a lower gear. Otherwise, the lower gear may not be engaged.
- Always use the parking brake. Do not depend on placing the transaxle in P (Park) to keep the vehicle from moving.
- Exercise extreme caution when driving on a slippery surface. Be especially careful when braking, accelerating or shifting gears. On a slippery surface, an abrupt change in vehicle speed can cause the drive wheels to lose traction and the vehicle to go out of control.
- Optimum vehicle performance and economy is obtained by smoothly depressing and releasing the accelerator pedal.

⚠ WARNING

- **Always buckle-up! In a collision, an unbelted occupant is significantly more likely to be seriously injured or killed than a properly belted occupant.**
- **Avoid high speeds when cornering or turning.**
- **Do not make quick steering wheel movements, such as sharp lane changes or fast, sharp turns.**
- **The risk of rollover is greatly increased if you lose control of your vehicle at highway speeds.**
- **Loss of control often occurs if two or more wheels drop off the roadway and the driver oversteers to reenter the roadway.**
- **In the event your vehicle leaves the roadway, do not steer sharply. Instead, slow down before pulling back into the travel lanes.**
- **Never exceed posted speed limits.**

⚠ WARNING

If your vehicle becomes stuck in snow, mud, sand, etc., then you may attempt to rock the vehicle free by moving it forward and backward. Do not attempt this procedure if people or objects are anywhere near the vehicle. During the rocking operation the vehicle may suddenly move forward of backward as it becomes unstuck, causing injury or damage to nearby people or objects.

Moving up a steep grade from a standing start

To move up a steep grade from a standing start, depress the brake pedal, shift the shift lever to D (Drive). Select the appropriate gear depending on load weight and steepness of the grade, and release the parking brake. Depress the accelerator gradually whilst releasing the service brakes.

When accelerating from a stop on a steep hill, the vehicle may have a tendency to roll backwards. Shifting the shift lever into 2 (Second Gear) will help prevent the vehicle from rolling backwards.

ALL WHEEL DRIVE (AWD) (IF EQUIPPED)



Engine power can be delivered to all front and rear wheels for maximum traction. AWD is useful when extra traction is required on road, such as, when driving on slippery, muddy, wet, or snow-covered roads. These vehicles are not designed for challenging off-road use. Occasional off-road use such as established unpaved roads and trails are OK. It is always important when travelling off-highway that the driver carefully reduces the speed to a level that does not exceed the safe operating speed for those conditions. In general, off-road conditions provide less traction and braking effectiveness than normal road conditions.

* AWD : All Wheel Drive
FWD : Front Wheel Drive

The driver must be especially alert to avoid driving on slopes which tilt the vehicle to either side.

These factors must be carefully considered when driving off-road. Keeping the vehicle in contact with the driving surface and under control in these conditions is always the driver's responsibility for the safety of him/herself and his or her passengers.

⚠ WARNING - Off road driving

This vehicle is designed primarily for on road use although it can operate effectively off road. However, it was not designed to drive in challenging off-road conditions. Driving in conditions that exceed the vehicle's intended design or the driver's experience level may result in severe injury or death.

⚠ WARNING

If the AWD system warning light ( ) illuminates, this indicates that there is a malfunction in the AWD system.

In this case, have the system checked by a professional workshop. Kia recommends to visit an authorised Kia dealer/service partner.

All Wheel Drive (AWD) transfer mode selection

Transfer mode	Selection button	Indicator light	Description
AWD AUTO (AWD LOCK is deactivated)		LOCK (Indicator light is not illuminated)	• AWD Auto is used when driving on roads in normal conditions, roads in urban areas, and on highways. • All wheels are in operation when a vehicle travels at a constant speed. Required tractions applying on front and rear wheels vary depending on road driving conditions and driving conditions, which will be automatically controlled by the computing system. • When the cluster's AWD Auto display mode is selected, the cluster displays the status of how four wheels' traction forces are distributed.
AWD LOCK		LOCK (Indicator light is illuminated)	• The main goal of AWD Lock mode is to allow a driver to maximize the vehicle's traction under extreme driving conditions such as unpaved off-road, sandy roads, and muddy roads. • AWD Lock mode is in operation only when a vehicle travels at 40km/h or less. When travelling at 40km/h or faster, the mode will switch to AWD Auto. When travelling at 30 km/h or less, the mode will switch back to AWD Lock. • When AWD Lock mode illuminates, the cluster does not display the front/rear wheel traction force distribution status. • Press the AWD Lock mode switch again to switch back to AWD Auto.

✻ NOTICE

- **Maintain AWD Auto mode when driving on roads in normal conditions.**
- **When driving under normal road conditions (especially when cornering) in AWD Lock mode, a driver may find minor mechanical vibration or noise, which is extremely normal phenomenon, not a malfunction. When AWD Lock mode is released, such noise or vibration will be immediately gone.**

For safe all wheel drive operation

⚠ WARNING - All wheel drive

The conditions of on-road or off-road that demand all wheel drive mean all functions of your vehicle are exposed to extreme stress than under normal road conditions. Slow down and be ready for changes in the composition and traction of the surface under your tyres. If you have any doubt about the safety of the conditions you are facing, stop and consider the best way to proceed. Do not exceed the ability of yourself or your vehicle to operate safely.

- Do not try to drive in deep standing water or mud since such conditions can stall your engine and clog your exhaust pipes. Do not drive down steep hills since it requires extreme skill to maintain control of the vehicle.

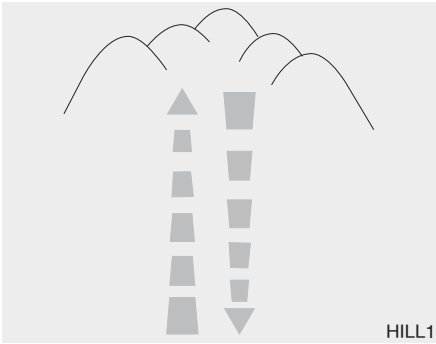

HILL1

- When you are driving up or down hills drive as straight as possible. Use extreme caution in going up or down steep hills, since you may flip your vehicle over depending on the grade, terrain and water/mud conditions.



HILL2

⚠ WARNING - Hills

Driving across the contour of steep hills can be extremely dangerous. This danger can come from slight changes in the wheel angle which can destabilize the vehicle or, even if the vehicle is maintaining stability under power, it can lose that stability if the vehicle stops its forward motion. Your vehicle may roll over without warning and without time for you to correct a mistake that could cause serious injury or death.

- You must consciously take the effort to learn how to corner in a AWD vehicle. Do not rely on your experience in conventional FWD vehicles in choosing safe cornering speed in AWD mode. For starters, you must drive more slowly in AWD.
- Drive carefully off-road because your vehicle may be damaged by rocks or roots of trees. Become familiar with the off-road conditions where you are going to drive before you begin driving.

⚠ WARNING - AWD

Reduce speed when you turn corners. The centre of gravity of AWD vehicles is higher than that of conventional FWD vehicles, making them more likely to roll over when you turn corners too fast.



OUM058053L

⚠ WARNING - Steering wheel

Do not grab the inside of the steering wheel when you are driving off-road. You may hurt your arm by a sudden steering manoeuvre or from steering wheel rebound due to impact with objects on the ground. You could lose control of the steering wheel.

- Always hold the steering wheel firmly when you are driving off-road.
- Make sure all passengers are wearing seat belts.

⚠ WARNING - Wind danger

If you are driving in heavy wind, the vehicle's higher centre of gravity decreases your steering control capacity and requires you to drive more slowly.

- If you need to drive in the water, stop your vehicle, set your transfer to the AWD LOCK mode and drive at less than 8 km/h (5 mph).

⚠ WARNING - Driving through water

Drive slowly. If you are driving too fast in water, the water can get into the engine compartment and wet the ignition system, causing your vehicle to suddenly stop. If this happens and your vehicle is in a tilted position, your vehicle may roll over.

✻ NOTICE

- Do not drive in water if the level is higher than the bottom of the vehicle.
- Check your brake condition once you are out of mud or water. Press the brake pedal several times as you move slowly until you feel normal braking forces return.
- Shorten your scheduled maintenance interval if you drive in off-road conditions such as sand, mud or water (see “Maintenance under severe usage conditions” in section 8). Always wash your vehicle thoroughly after off-road use, especially cleaning the bottom of the vehicle.
- Since the driving torque is always applied to the 4 wheels the performance of the AWD vehicle is greatly affected by the condition of the tyres. Be sure to equip the vehicle with four tyres of the same size and type.
- A full time all wheel drive vehicle cannot be towed by an ordinary tow truck. Make sure that the vehicle is placed on a flat bed truck for moving.

⚠ WARNING - AWD driving

- Avoid high cornering speed.
- Do not make quick steering wheel movements, such as sharp lane changes or fast, sharp turns.
- The risk of rollover is greatly increased if you lose control of your vehicle at high speed.
- In a collision, an unbelted person is significantly more likely to die compared to a person wearing a seat belt.
- Loss of control often occurs if two or more wheels drop off the roadway and the driver over-steers to re-enter the roadway. In the event your vehicle leaves the roadway, do not steer sharply. Instead, slow down before pulling back into the travel lanes.

⚠ CAUTION - Mud or snow

If one of the front or rear wheels begins to spin in mud, snow, etc. the vehicle can sometimes be driven out by depressing the accelerator pedal further; however avoid running the engine continuously at high rpm because doing so could damage the AWD system.

Reducing the risk of a rollover

This multi-purpose passenger vehicle is defined as a Sports Utility Vehicle (SUV). Utility vehicles have a significantly higher rollover rate than other types of vehicles. SUV's have higher ground clearance and a narrower track to make them capable of performing in a wide variety of off-road applications. Specific design characteristics give them a higher centre of gravity than ordinary vehicles.

An advantage of the higher ground clearance is a better view of the road, which allows you to anticipate problems. They are not designed for cornering at the same speeds as conventional passenger vehicles, any more than low slung sports vehicles are designed to perform satisfactorily in off-road conditions. Due to this risk, driver and passengers are strongly recommended to buckle their seat belts. In a rollover crash, an unbelted person is significantly more likely to die than a person wearing a seat belt. There are steps that a driver can make to reduce the risk of a rollover.

If at all possible, avoid sharp turns or abrupt maneuvres, do not load your roof rack with heavy cargo, and never modify your vehicle in any way.

⚠ WARNING - Rollover

As with other Sports Utility Vehicle (SUV), failure to operate this vehicle correctly may result in loss of control, an accident or vehicle rollover.

- **Utility vehicles have a significantly higher rollover rate than other types of vehicles.**
- **Specific design characteristics (higher ground clearance, narrower track, etc.) give this vehicle a higher centre of gravity than ordinary vehicles.**
- **A SUV is not designed for cornering at the same speeds as conventional vehicles.**
- **Avoid sharp turns or abrupt manoeuvre.**
- **In a rollover crash, an unbelted person is significantly more likely to die than a person wearing a seat belt. Make sure everyone in the vehicle is properly buckled up.**

⚠ WARNING

Your vehicle is equipped with tyres designed to provide safe ride and handling capability. Do not use a size and type of tyre and wheel that is different from the one that is originally installed on your vehicle. It can affect the safety and performance of your vehicle, which could lead to steering failure or rollover and serious injury. When replacing the tyres, be sure to equip all four tyres with the tyre and wheel of the same size, type, tread, brand and load-carrying capacity. If you nevertheless decide to equip your vehicle with any tyre/wheel combination not recommended by Kia for off road driving, you should not use these tyres for highway driving.

⚠ WARNING - Jacked vehicle

Whilst the full-time AWD vehicle is being raised on a jack, never start the engine or cause the tyres to rotate.

There is the danger that rotating tyres touching the ground could cause the vehicle to go off the jack and to jump forward.

- Full-time AWD vehicles must be tested on a special four wheel chassis dynamometer.

✻ NOTICE

Never engage the parking brake whilst performing these tests.

- A full-time AWD vehicle should not be tested on a FWD roll tester. If a FWD roll tester must be used, perform the following:

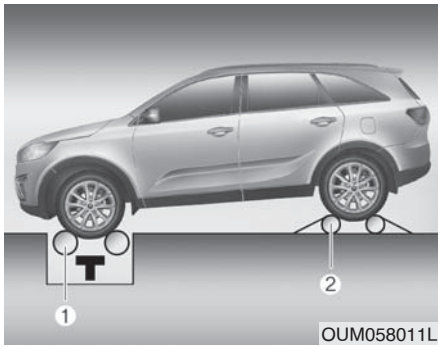

1. Check the tyre pressures recommended for your vehicle.
2. Place the front wheels on the roll tester (1) for a speedometer test as shown in the illustration.
3. Release the parking brake.
4. Place the rear wheels on the temporary free roller (2) as shown in the illustration.

⚠ WARNING - Dynamometer testing

Keep away from the front of the vehicle whilst the vehicle is in gear on the dynamometer. This is very dangerous as the vehicle can jump forward and cause serious injury or death.

⚠ CAUTION

- ***When lifting up the vehicle, do not operate front and rear wheel separately. All four wheels should be operated.***
- ***If you need to operate the front wheel and rear wheel when lifting up the vehicle, you should release the parking brake.***

BRAKE SYSTEM

Power brakes

Your vehicle has power-assisted brakes that adjust automatically through normal usage.

In the event that the power-assisted brakes lose power because of a stalled engine or some other reason, you can still stop your vehicle by applying greater force to the brake pedal than you normally would. The stopping distance, however, will be longer.

When the engine is not running, the reserve brake power is partially depleted each time the brake pedal is applied. Do not pump the brake pedal when the power assist has been interrupted.

Pump the brake pedal only when necessary to maintain steering control on slippery surfaces.

⚠ WARNING - Brakes

- **Do not drive with your foot resting on the brake pedal. This will create abnormal high brake temperatures, excessive brake lining and pad wear, and increased stopping distances.**
- **When descending a long or steep hill, shift to a lower gear and avoid continuous application of the brakes. Continuous brake application will cause the brakes to overheat and could result in a temporary loss of braking performance.**
- **Wet brakes may impair the vehicle's ability to safely slow down; the vehicle may also pull to one side when the brakes are applied. Applying the brakes lightly will indicate whether they have been affected in this way.**

(Continued)

(Continued)

Always test your brakes in this fashion after driving through deep water. To dry the brakes, apply them lightly whilst maintaining a safe forward speed until brake performance returns to normal.

- **Always, confirm the position of the brake and accelerator pedal before driving. If you don't check the position of the accelerator and brake pedal before driving, you may depress the accelerator instead of the brake pedal. It may cause a serious accident.**

In the event of brake failure

If service brakes fail to operate whilst the vehicle is in motion, you can make an emergency stop with the parking brake. The stopping distance, however, will be much greater than normal.

⚠ WARNING - Parking brake

Applying the parking brake whilst the vehicle is moving at normal speeds can cause a sudden loss of control of the vehicle. If you must use the parking brake to stop the vehicle, use great caution in applying the brake.

⚠ CAUTION

Do not operate the parking brake whilst the vehicle is moving except in an emergency situation. It could damage the vehicle system and make endanger driving safety.

Disc brakes wear indicator

When your brake pads are worn and new pads are required, you will hear a high-pitched warning sound from your front brakes or rear brakes (if equipped). You may hear this sound come and go or it may occur whenever you depress the brake pedal.

Please remember that some driving conditions or climates may cause a brake squeal when you first apply (or lightly apply) the brakes. This is normal and does not indicate a problem with your brakes.

⚠ CAUTION

- ***To avoid costly brake repairs, do not continue to drive with worn brake pads.***
- ***Always replace the front or rear brake pads as pairs.***

⚠ WARNING - Brake wear

This brake wear warning sound means your vehicle needs service. If you ignore this audible warning, you will eventually lose braking performance, which could lead to a serious accident.


WK-23_TF

Check the brake warning light by turning the ignition switch ON (do not start the engine). This light will be illuminated when the parking brake is applied with the ignition switch in the START or ON position.

Before driving, be sure the parking brake is fully released and the brake warning light is off.

If the brake warning light remains on after the parking brake is released whilst the engine is running, there may be a malfunction in the brake system. Immediate attention is necessary.

If at all possible, cease driving the vehicle immediately. If that is not possible, use extreme caution whilst operating the vehicle and only continue to drive the vehicle until you can reach a safe location or repair shop.

Electronic Parking Brake (EPB) (if equipped)

Applying the parking brake

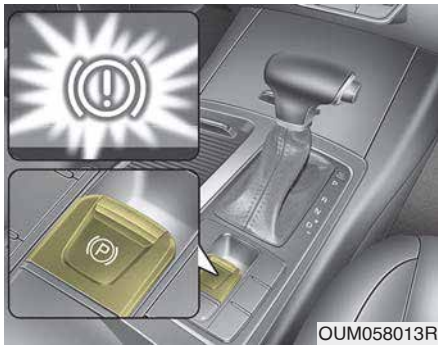
OUM058013R

To apply the EPB (Electronic Parking Brake):

1. Depress the brake pedal.
2. Pull up the EPB switch.

Make sure the warning light comes on.

Also, the EPB is applied automatically if the Auto Hold button is on when the engine is turned off. However, if you keep pressing the EPB switch till the engine is turned off, the EPB will not be applied.

✻ NOTICE

On a steep incline or when pulling a trailer if the vehicle does not stand still, do as follows:

1. **Apply the EPB.**
2. **Pull up the EPB switch for more than 3 seconds.**

⚠ CAUTION

Do not operate the parking brake whilst the vehicle is moving except in an emergency situation. It could damage the vehicle system and endanger driving safety.

Releasing the parking brake

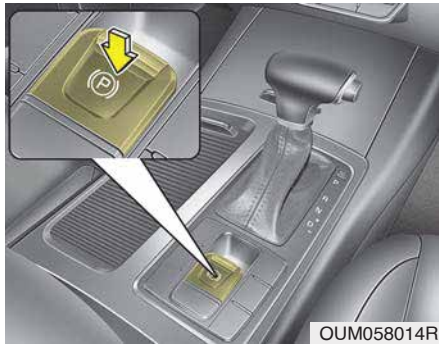

To release the EPB (Electronic Parking Brake), press the EPB switch in the following condition:

- Have the ignition switch or engine start/stop button in the ON position.
- Depress the brake pedal.

Make sure the brake warning light goes off.

To release EPB (Electronic Parking Brake) automatically:

- Shift lever in P (Park)

  With the engine running depress the brake pedal and shift out of P (Park) to R (Rear) or D (Drive).
- Shift lever in N (Neutral)

  With the engine running depress the brake pedal and shift out of N (Neutral) to R (Rear) or D (Drive).
- Manual transaxle vehicle

  1. Start the engine.
  2. Fasten the driver's seat belt.
  3. Close the driver's door, engine bonnet and trunk.
  4. Depress the clutch pedal with the gear engaged.
  5. Depress the accelerator pedal whilst releasing the clutch pedal.

- Automatic transaxle vehicle
  1. Start the engine.
  2. Fasten the driver's seat belt.
  3. Close the driver's door, engine bonnet and trunk.
  4. Depress the accelerator pedal whilst the shift lever is in R (Rear), D (Drive) or Sports mode.

Make sure the brake warning light goes off.

✻ NOTICE

- **For your safety, you can engage the EPB even though the ignition switch or engine stop/start button is in the OFF position, but you cannot release it.**
- **For your safety, depress the brake pedal and release the parking brake manually with the EPB switch when you drive downhill or when backing up the vehicle.**

✻ NOTICE - Manual transaxle

A vehicle towing a trailer on a hill or on an incline may slightly roll backwards when starting the vehicle. To prevent the situation follow the below instructions.

1. **Depress the clutch pedal and select a gear.**
2. **Keep pulling up the EPB switch.**
3. **Depress the accelerator pedal and slowly release the clutch pedal.**
4. **If the vehicle starts off with enough driving power release the EPB switch.**

Do not follow the above procedure when driving on a flat level ground. The vehicle may suddenly move forward.

⚠ CAUTION

- ***If the parking brake warning light is still on even though the EPB has been released, have the system checked by a professional workshop. Kia recommends to visit an authorised Kia dealer/ service partner.***
- ***Do not drive your vehicle with the EPB applied. It may cause excessive brake pad and brake rotor wear.***

EPB (Electronic Parking Brake) may be automatically applied when:

- The EPB is overheated
- Requested by other systems

✻ NOTICE

If the driver turns the engine off by mistake whilst Auto Hold is operating, EPB will be automatically applied. (Vehicle's equipped with Auto Hold)

System warning



OUM058276L

- If you try to drive off depressing the accelerator pedal with the EPB applied, but doesn't release automatically, a warning will sound and a message will appear.
- If the driver's seat belt is not fastened and the engine bonnet or trunk is opened, a warning will sound and a message will appear.
- If there is a problem with the vehicle, a warning may sound and a message may appear.

If the above situation occurs, depress the brake pedal and release EPB by pressing the EPB switch.

⚠ WARNING

- **To prevent unintentional movement when stopped and leaving the vehicle, do not use the shift lever in place of the parking brake. Set the parking brake and make sure the shift lever is securely positioned in P (Park).**
- **Never allow anyone who is unfamiliar with the vehicle to touch the parking brake. If the parking brake is released unintentionally, serious injury may occur.**
- **All vehicles should always have the parking brake fully engaged when parking to avoid inadvertent movement of the car which can injure occupants or pedestrians.**

⚠ CAUTION

- ***A click sound may be heard whilst operating or releasing the EPB, but these conditions are normal and indicate that the EPB is functioning properly.***
- ***When leaving your keys with a parking lot attendant or valet, make sure to inform him/her how to operate the EPB.***
- ***The EPB may malfunction if you drive with the EPB applied.***
- ***When you automatically release EPB by depressing the accelerator pedal, depress it slowly.***

System warning



OUM058277L

When the conversion from Auto Hold to EPB is not working properly a warning will sound and a message will appear.

⚠ CAUTION

Depress the brake pedal when the above message appears for the Auto Hold and EPB may not activate.

System warning



If the EPB is applied whilst Auto Hold is activated because of ESC (Electronic Stability Control) signal, a warning will sound and a message will appear.

EPB malfunction indicator (if equipped)



This warning light illuminates if the engine start/stop button is changed to the ON position and goes off in approximately 3 seconds if the system is operation normally.

If the EPB malfunction indicator remains on, comes on whilst driving, or does not come on when the ignition switch or the engine start/stop button is changed to the ON position, this indicates that the EPB may have malfunctioned.

If this occurs, have the system checked by a professional workshop. Kia recommends to visit an authorised Kia dealer/service partner.

The EPB malfunction indicator may illuminate when the ESC indicator comes on to indicate that the ESC is not working properly, but it does not indicate a malfunction of the EPB.

⚠ CAUTION

- ***The EPB warning light may illuminate if the EPB switch operates abnormally. Shut the engine off and turn it on again after a few minutes. The warning light will go off and the EPB switch will operate normally. However, if the EPB warning light is still on, have the system checked by a professional workshop. Kia recommends to visit an authorised Kia dealer/service partner.***

(Continued)

(Continued)

- ***If the parking brake warning light does not illuminate or blinks even though the EPB switch was pulled up, the EPB is not applied.***
- ***If the parking brake warning light blinks when the EPB warning light is on, press the switch, then pull it up. Once more press it back to its original position and pull it back up. If the EPB warning does not go off, have the system checked by a professional workshop. Kia recommends to visit an authorised Kia dealer/service partner.***

Emergency braking

If there is a problem with the brake pedal whilst driving, emergency braking is possible by pulling up and holding the EPB switch. Braking is possible only whilst you are holding the EPB switch.

⚠ WARNING

Do not operate the parking brake whilst the vehicle is moving except in an emergency situation.

✻ NOTICE

During emergency braking by the EPB, the parking brake warning light will illuminate to indicate that the system is operating.

⚠ CAUTION

If you continuously notice a noise or burning smell when the EPB is used for emergency braking, have the system checked by a professional workshop.

Kia recommends to visit an authorised Kia dealer/service partner.

When the EPB (Electronic Parking Brake) does not release

If the EPB does not release normally, load the vehicle on a flatbed tow truck and have the system checked by a professional workshop. Kia recommends to visit an authorised Kia dealer/service partner.

AUTO HOLD (if equipped)

The Auto Hold maintains the vehicle in a standstill even though the brake pedal is not depressed after the driver brings the vehicle to a complete stop by depressing the brake pedal.

Set up

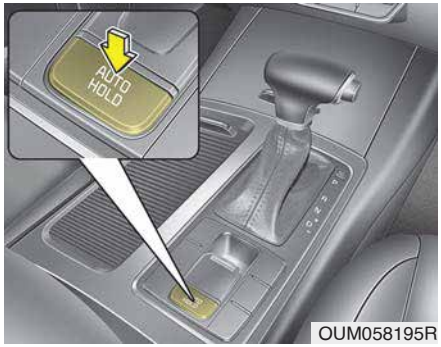

OUM058195R

1. With the driver's door, engine bonnet and trunk closed, fasten the driver's seat belt or depress the brake pedal and then press the Auto Hold button. The white AUTO HOLD indicator will come on and the system will be in the standby position.

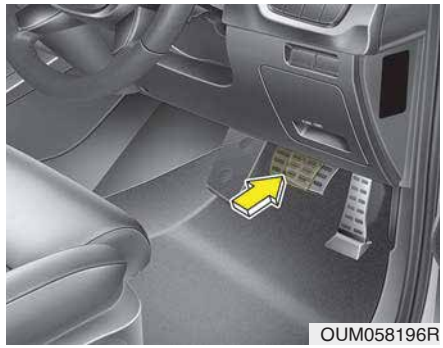
OUM058196R

2. When you stop the vehicle completely by depressing the brake pedal, the AUTO HOLD indicator changes from white to green.
3. The vehicle will remain stationary even if you release the brake pedal.
4. If EPB is applied, Auto Hold will be released.

Leaving

If you press the accelerator pedal with the shift lever in R (Reverse), D (Drive) or sports mode, the Auto Hold will be released automatically and the vehicle will start to move. The indicator changes from green to white.

⚠ WARNING

When driving off from Auto Hold by depressing the accelerator pedal, always check the surrounding area near your vehicle.

Slowly depress the accelerator pedal for a smooth launch.

Cancel

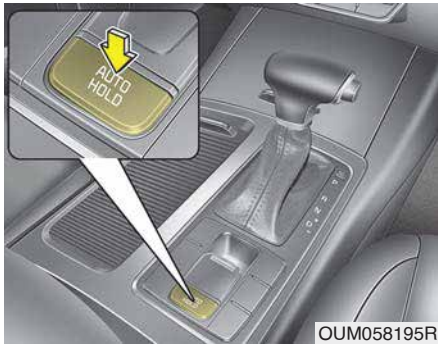

To cancel the Auto Hold operation, press the Auto Hold switch. The AUTO HOLD indicator will go out.

To cancel the Auto Hold operation when the vehicle is at a standstill, press the Auto Hold switch whilst depressing the brake pedal.

✻ NOTICE

- **The Auto Hold does not operate when:**
  - **The driver's door is opened**
  - **The engine bonnet is opened when the shift lever is in D (Drive), N (Neutral)**
  - **The shift lever is in P (Park), R (Reverse)**
  - **The shift lever is in P (Park)**
  - **The EPB is applied**
- **For your safety, the Auto Hold automatically switches to EPB in such cases:**
  - **The driver's door is opened**
  - **The engine bonnet is opened when the shift lever is in D (Drive), N (Neutral)**
  - **The vehicle is in a standstill for more than 10 minutes**
  - **The vehicle is standing on a steep slope**
  - **The vehicle moved several times**

(Continued)

(Continued)

In these cases, the brake warning light comes on, the AUTO HOLD indicator changes from green to white, and a warning sounds and a message will appear to inform you that EPB has been automatically engaged. Before driving off again, press foot brake pedal, check the surrounding area near your vehicle and release parking brake manually with the EPB switch.

- If the AUTO HOLD indicator lights up yellow, the Auto Hold is not working properly. In this case, have your vehicle inspected by a professional workshop. Kia recommends to contact an authorised Kia dealer/service partner.
- Whilst operating Auto Hold, you may heard mechanical noise. However, it is normal operation noise.

⚠ WARNING

- **Press the accelerator pedal slowly when you start the vehicle.**
- **For your safety, cancel the Auto Hold when you drive downhill or back up the vehicle or park the vehicle.**

⚠ CAUTION

If there is a malfunction with the driver's door, engine bonnet or trunk open detection system, the Auto Hold may not work properly.

In this case, have your vehicle inspected by a professional workshop. Kia recommends to contact an authorised Kia dealer/service partner.

Anti-lock brake system (ABS)

⚠ WARNING

ABS (or ESC) will not prevent accidents due to improper or dangerous driving manoeuvre. Even though vehicle control is improved during emergency braking, always maintain a safe distance between you and objects ahead. Vehicle speeds should always be reduced during extreme road conditions.

The braking distance for vehicle equipped with an anti-lock braking system (or Electronic Stability Control) may be longer than for those without it in the following road conditions.

During these conditions the vehicle should be driven at reduced speeds:

- **Rough, gravel or snow-covered roads.**
- **With tyre chains installed.**

(Continued)

(Continued)

- **On roads where the road surface is pitted or has different surface height.**

The safety features of an ABS (or ESC) equipped vehicle should not be tested by high speed driving or cornering. This could endanger the safety of yourself or others.

The ABS continuously senses the speed of the wheels. If the wheels are going to lock, the ABS system repeatedly modulates the hydraulic brake pressure to the wheels.

When you apply your brakes under conditions which may lock the wheels, you may hear a “tik-tik” sound from the brakes, or feel a corresponding sensation in the brake pedal. This is normal and it means your ABS is active.

In order to obtain the maximum benefit from your ABS in an emergency situation, do not attempt to modulate your brake pressure and do not try to pump your brakes. Press your brake pedal as hard as possible or as hard as the situation warrants and allow the ABS to control the force being delivered to the brakes.

✻ NOTICE

A click sound may be heard in the engine compartment when the vehicle begins to move after the engine is started. These conditions are normal and indicate that the anti-lock brake system is functioning properly.

- Even with the anti-lock brake system, your vehicle still requires sufficient stopping distance. Always maintain a safe distance from the vehicle in front of you.
- Always slow down when cornering. The anti-lock brake system cannot prevent accidents resulting from excessive speeds.
- On loose or uneven road surfaces, operation of the anti-lock brake system may result in a longer stopping distance than for vehicles equipped with a conventional brake system.



W-78

⚠ CAUTION

- ***If the ABS warning light is on and stays on, you may have a problem with the ABS. In this case, however, your regular brakes will work normally.***

(Continued)

(Continued)

- ***The ABS warning light will stay on for approximately 3 seconds after the ignition switch is ON. During that time, the ABS will go through self-diagnosis and the light will go off if everything is normal. If the light stays on, you may have a problem with your ABS. In this case, have your vehicle inspected by a professional workshop. Kia recommends to contact an authorised Kia dealer/service partner.***

⚠ CAUTION

- ***When you drive on a road having poor traction, such as an icy road, and operate your brakes continuously, the ABS will be active continuously and the ABS warning light may illuminate. Pull your vehicle over to a safe place and stop the engine.***
- ***Restart the engine. If the ABS warning light is off, then your ABS system is normal. Otherwise, you may have a problem with the ABS. In this case, have your vehicle inspected by a professional workshop. Kia recommends to contact an authorised Kia dealer/service partner.***

✻ NOTICE

When you jump start your vehicle because of a drained battery, the engine may not run as smoothly and the ABS warning light may turn on at the same time. This happens because of the low battery voltage. It does not mean your ABS is malfunctioning.

- **Do not pump your brakes!**
- **Have the battery recharged before driving the vehicle.**

Electronic stability control (ESC) (if equipped)

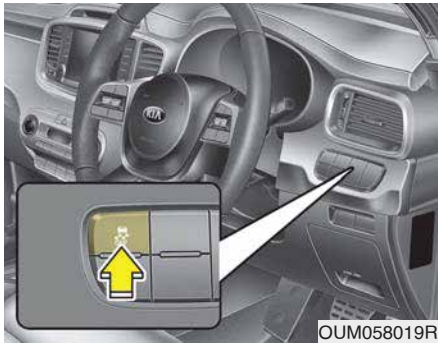

The Electronic Stability Control (ESC) system is designed to stabilize the vehicle during cornering manoeuvre. ESC checks where you are steering and where the vehicle is actually going. ESC applies the brakes at individual wheels and intervenes with engine management system to stabilize the vehicle.

⚠ WARNING

Never drive too fast for the road conditions or too quickly when cornering. Electronic stability control (ESC) will not prevent accidents. Excessive speed in turns, abrupt manoeuvre and hydroplaning on wet surfaces can still result in serious accidents. Only a safe and attentive driver can prevent accidents by avoiding manoeuvre that cause the vehicle to lose traction. Even with ESC installed, always follow all the normal precautions for driving - including driving at safe speeds for the conditions.

The Electronic stability control (ESC) system is an electronic system designed to help the driver maintain vehicle control under adverse conditions. It is not a substitute for safe driving practices. Factors including speed, road conditions and driver steering input can all affect whether ESC will be effective in preventing a loss of control. It is still your responsibility to drive and corner at reasonable speeds and to leave a sufficient margin of safety.

When you apply your brakes under conditions which may lock the wheels, you may hear a “tik-tik” sound from the brakes, or feel a corresponding sensation in the brake pedal. This is normal and it means your ESC is active.

✻ NOTICE

A click sound may be heard in the engine compartment when the vehicle begins to move after the engine is started. These conditions are normal and indicate that the Electronic stability control (ESC) System is functioning properly.

ESC operation

ESC ON condition

-

- When the ignition is turned ON, ESC and ESC OFF indicator lights illuminate for approximately 3 seconds, then ESC is turned on.
- Press the ESC OFF button for at least half a second after turning the ignition ON to turn ESC off. (ESC OFF indicator will illuminate). To turn the ESC on, press the ESC OFF button (ESC OFF indicator light will go off).
- When starting the engine, you may hear a slight ticking sound. This is the ESC performing an automatic system self-check and does not indicate a problem.

When operating



When the ESC is in operation, ESC indicator light blinks.

- When the Electronic Stability Control is operating properly, you can feel a slight pulsation in the vehicle. This is only the effect of brake control and indicates nothing unusual.
- When moving out of the mud or slippery road, the engine rpm (revolution per minute) may not increase even if you press the accelerator pedal deeply. This is to maintain the stability and traction of the vehicle and does not indicate a problem.

ESC operation off

ESC OFF state



This car has 2 kinds of ESC off states.

If the engine stops when ESC is off, ESC remains off. Upon restarting the engine, the ESC will automatically turn on again.



OUM058279L

• ESC off state 1

To cancel ESC operation, press the ESC OFF button (ESC OFF) shortly (ESC OFF indicator light (ESC OFF) illuminates). At this state, the engine control function does not operate. It means the traction control function does not operate. Brake control function only operates.



OUM058280L

• ESC off state 2

To cancel ESC operation, press the ESC OFF button (ESC OFF) for more than 3 seconds. ESC OFF indicator light (ESC OFF) illuminates and ESC OFF warning chime will sound. At this state, the engine control function and brake control function do not operate. It means the car stability control function does not operate any more.

Indicator light

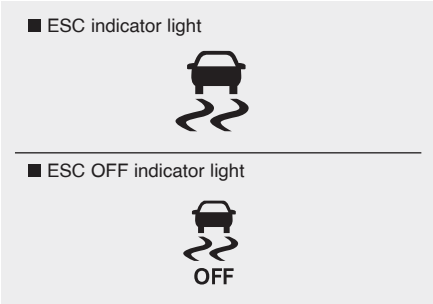

When ignition switch is turned to ON, the indicator light illuminates, then goes off if the ESC system is operating normally.

The ESC indicator light blinks whenever ESC is operating or illuminates when ESC fails to operate.

ESC OFF indicator light comes on when the ESC is turned off with the button.

⚠ CAUTION

Driving with varying tyre or wheel sizes may cause the ESC system to malfunction. When replacing tyres, make sure they are the same size as your original tyres.

⚠ WARNING

The Electronic Stability Control system is only a driving aid; use precautions for safe driving by slowing down on curved, snowy, or icy roads. Drive slowly and don't attempt to accelerate whenever the ESC indicator light is blinking, or when the road surface is slippery.

ESC OFF usage

When driving

- ESC should be turned on for daily driving whenever possible.
- To turn ESC off whilst driving, press the ESC OFF button whilst driving on a flat road surface.

⚠ WARNING

Never press the ESC OFF button whilst ESC is operating (ESC indicator light blinks).

If ESC is turned off whilst ESC is operating, the vehicle may slip out of control.

✻ NOTICE

- **When operating the vehicle on a dynamometer, ensure that the ESC is turned off by pressing the ESC OFF button for more than 3 seconds (ESC OFF light illuminated). If the ESC is left on, it may prevent the vehicle speed from increasing, and result in false diagnosis.**
- **Turning the ESC off does not affect ABS or brake system operation.**

Vehicle stability management (VSM) (if equipped)

This system provides further enhancements to vehicle stability and steering responses when a vehicle is driving on a slippery road or a vehicle detected changes in coefficient of friction between right wheels and left wheels when braking.

VSM operation

When the VSM is operating:

- ESC (Electronic Stability Control) ( ) light will blink.
- The steering wheel may be controlled.

When the vehicle stability management is operating properly, you can feel a slight pulsation in the vehicle. This is only the effect of brake control and indicates nothing unusual.

The VSM does not operate when:

- Driving on bank road such as gradient or incline
- Driving rearward
- ESC OFF indicator light ( ) remains on the instrument cluster
- EPS (Electronic Power Steering) indicator light remains on the instrument cluster

VSM operation off

If you press the ESC OFF button to turn off the ESC, the VSM will also cancel and the ESC OFF indicator light ( ) illuminates.

To turn on the VSM, press the button again. The ESC OFF indicator light goes out.

Malfunction indicator

The VSM can be deactivated even if you don't cancel the VSM operation by pressing the ESC OFF button. It indicates that a malfunction has been detected somewhere in the EPS (Electronic Power Steering) system or VSM system. If the ESC indicator light ( ) or EPS warning light remains on, have the system checked by a professional workshop. Kia recommends to visit an authorised Kia dealer/service partner.

✵ NOTICE

- **The VSM is designed to function above approximately 22 km/h (13 mph) on curves.**
- **The VSM is designed to function above approximately 10 km/h (6 mph) when a vehicle is braking on a split-mu road. The split-mu road is made of surfaces which have different friction forces.**

⚠ WARNING

- **The Vehicle Stability Management system is not a substitute for safe driving practices but a supplementary function only. It is the responsibility of the driver to always check the speed and the distance to the vehicle ahead. Always hold the steering wheel firmly whilst driving.**
- **Your vehicle is designed to activate according to the driver's intention, even with the VSM installed. Always follow all the normal precautions for driving at safe speeds for the conditions – including driving in inclement weather and on a slippery road.**
- **Driving with varying tyre or wheel sizes may cause the VSM system to malfunction. When replacing tyres, make sure they are the same size as your original tyres.**

Good braking practices

⚠ WARNING

- **Whenever you leave or park your vehicle, always set the parking brake as far as possible and fully engage the vehicle's transaxle into the P (Park) position. If the parking brake is not fully engaged, the vehicle may move inadvertently and injure yourself and others.**
- **All vehicles should always have the parking brake fully engaged when parking to avoid inadvertent movement of the vehicle which can injure occupants or pedestrians.**

- Check to be sure the parking brake is not engaged and that the parking brake indicator light is out before driving away.
- Driving through water may get the brakes wet. They can also get wet when the vehicle is washed. Wet brakes can be dangerous! Your vehicle will not stop as quickly if the brakes are wet. Wet brakes may cause the vehicle to pull to one side.

  To dry the brakes, apply the brakes lightly until the braking action returns to normal, taking care to keep the vehicle under control at all times. If the braking action does not return to normal, stop as soon as it is safe to do so and have your vehicle inspected by a professional workshop.

  Kia recommends to call an authorised Kia dealer/service partner.
- Do not coast down hills with the vehicle out of gear. This is extremely hazardous. Keep the vehicle in gear at all times, use the brakes to slow down, then shift to a lower gear so that engine braking will help you maintain a safe speed.
- Do not "ride" the brake pedal. Resting your foot on the brake pedal whilst driving can be dangerous because it can result in the brakes overheating and losing their effectiveness. It also increases the wear of the brake components.
- If a tyre goes flat whilst you are driving, apply the brakes gently and keep the vehicle pointed straight ahead whilst you slow down. When you are moving slowly enough for it to be safe to do so, pull off the road and stop in a safe place.
- If your vehicle is equipped with an automatic transaxle, do not let your vehicle creep forward. To avoid creeping forward, keep your foot firmly on the brake pedal when the vehicle is stopped.
- Be cautious when parking on a hill. Firmly engage the parking brake and place the shift lever in P (automatic transaxle) or in first or reverse gear (manual transaxle). If your vehicle is facing downhill, turn the front wheels into the kerb to help keep the vehicle from rolling. If your vehicle is facing uphill, turn the front wheels away from the kerb to help keep the vehicle from rolling. If there is no kerb or if it is required by other conditions to keep the vehicle from rolling, block the wheels.
- Under some conditions your parking brake can freeze in the engaged position. This is most likely to happen when there is an accumulation of snow or ice around or near the rear brakes or if the brakes are wet. If there is a risk that the parking brake may freeze, apply it only temporarily whilst you put the shift lever in P (automatic transaxle) or in first or reverse gear (manual transaxle) and block the rear wheels so the vehicle cannot roll. Then release the parking brake.
- Do not hold the vehicle on the upgrade with the accelerator pedal. This can cause the transaxle to overheat. Always use the brake pedal or parking brake.

Downhill Brake Control (DBC) (if equipped)

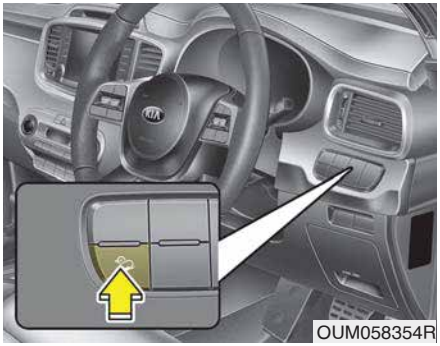

The Downhill Brake Control (DBC) feature assists the driver to descend down a steep hill without having to depress the brake pedal.

The system automatically applies the brakes to maintain the vehicle speed below a certain speed and allows the driver to concentrate on steering the vehicle down hill.

The DBC defaults to the off position whenever the ignition switch is placed to the ON position. Press the button to activate the system and press the button again to deactivate.

⚠ WARNING

Always turn off the DBC on normal roads. The DBC might activate inadvertently from the standby mode when driving through speed bumps or making sharp curves.

✻ NOTICE

- **Noise or vibration may occur from the brakes when the DBC is activated.**
- **The rear stop light comes on when DBC is activated.**



Downhill Brake Control disabled. Control vehicle speed

When the DBC system is not working properly this warning message will appear on the LCD display and you will hear a warning sound. If this occurs, control the vehicle speed by depressing the brake pedal.

DBC operation

Mode	Indicator light	Description
Standby	 Green light turns on	Press the DBC button when the vehicle speed is under 60 km/h (37 mph). The DBC system will turn on and enter the standby mode. The system does not turn on if the vehicle speed is over 60 km/h (37 mph).
Activated	 Green light blinks	In the standby mode, the DBC will activate under the following conditions: - The hill is steep enough. - The brake/accelerator pedal is not depressed. - The vehicle speed is within 4~30 km/h (2~18 mph) range (within 4~8 km/h (2~8 mph) when reversing). Within the activation speed range 4~30 km/h (2~18 mph), the driver can control the vehicle speedby depressing the brake/accelerator pedal.
Deactivated	 Green light turns off	The DBC will turn off under the following conditions: - The DBC button is pressed again. - The vehicle speed is over 60 km/h (37 mph).
	 Green light turns on (maintains standby mode)	The DBC will be deactivated but maintain the standby mode under the following conditions: - The hill is not steep enough. - The vehicle speed is between 30~64 km/h (18~40 mph).
System malfunction	 Yellow light turns on	The yellow warning light illuminates when the system may have malfunctioned or may not work properly during the activation. In this case, the DBC system is deactivated. Have the system checked by a professional workshop. Kia recommends to visit an authorised Kia dealer/ service partner.

⚠ WARNING

If the DBC red indicator light illuminates, the system may have overheated or have malfunctioned. When the warning light illuminates even though the DBC system has cooled off, have the vehicle checked by a professional workshop as soon as possible. Kia recommends to visit an authorised Kia dealer/service partner.

✻ NOTICE

- **The DBC may not deactivate on steep inclines even though the brake or accelerator pedal is depressed.**
- **The DBC does not operate when:**
  - The shift lever is in P (Park).
  - The ESC is activated.

Good braking practices

⚠ WARNING

Whenever leaving the vehicle or parking, always come to a complete stop and continue to depress the brake pedal. Move the shift lever into the P (Park) position, then apply the parking brake, and place the Engine Start/Stop button in the OFF position.

Vehicles with the parking brake not fully engaged are at risk for moving inadvertently and causing injury to yourself or others.

Wet brakes can be dangerous! The brakes may get wet if the vehicle is driven through standing water or if it is washed. Your vehicle will not stop as quickly if the brakes are wet. Wet brakes may cause the vehicle to pull to one side.

To dry the brakes, apply the brakes lightly until the braking action returns to normal, taking care to keep the vehicle under control at all times. If the braking action does not return to normal, stop as soon as it is safe to do so and have your vehicle inspected by a professional workshop. Kia recommends to call an authorised Kia dealer/service partner.

DO NOT drive with your foot resting on the brake pedal. Even light, but constant pedal pressure can result in the brakes overheating, brake wear, and possibly even brake failure.

If a tyre goes flat whilst you are driving, apply the brakes gently and keep the vehicle pointed straight ahead whilst you slow down. When you are moving slowly enough for it to be safe to do so, pull off the road and stop in a safe location.

Keep your foot firmly on the brake pedal when the vehicle is stopped to prevent the vehicle from rolling forward.

CRUISE CONTROL SYSTEM (IF EQUIPPED)



1. Cruise indicator
2. Cruise set indicator

The cruise control system allows you to program the vehicle to maintain a constant speed without pressing the accelerator pedal.

This system is designed to function above approximately 30 km/h (20 mph).

⚠ WARNING

- **If the cruise control is left on, (cruise indicator light is illuminated), the cruise control can be switched on accidentally. Keep the cruise control system off when the cruise control is not in use, to avoid inadvertently setting a speed.**
- **Use the cruise control system only when travelling on open highways in good weather.**
- **Do not use the cruise control when it may not be safe to keep the vehicle at a constant speed, for instance, driving in heavy or varying traffic, or on slippery (rainy, icy or snow-covered) or winding roads or over 6% up-hill or down-hill roads.**

(Continued)

(Continued)

- **Pay particular attention to the driving conditions whenever using the cruise control system.**
- **Be careful when driving downhill using the cruise control system, which may increase the vehicle speed.**

⚠ CAUTION

During cruise-speed driving of a manual transaxle vehicle, do not shift into neutral without depressing the clutch pedal, since the engine will be over-revved. If this happens, depress the clutch pedal or release the cruise control ON-OFF switch.

✻ NOTICE

- **During normal cruise control operation, when the SET switch is activated or reactivated after applying the brakes, the cruise control will energize after approximately 3 seconds. This delay is normal.**
- **To activate cruise control, depress the brake pedal at least once after turning the ignition switch to the ON position or starting the engine. This is to check if the brake switch which is important part to cancel cruise control is in normal condition.**

Cruise control switch

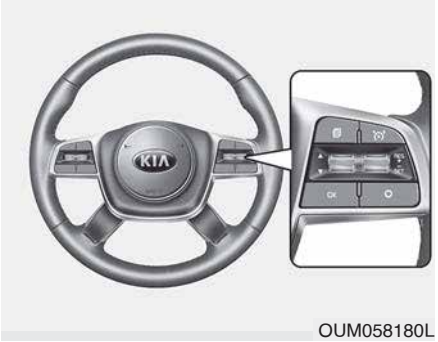

OUM058180L

CANCEL/O : Cancels cruise control operation.

CRUISE / : Turns cruise control system on or off.

RES+ : Resumes or increases cruise control speed.

SET- : Sets or decreases cruise control speed.

To set cruise control speed:

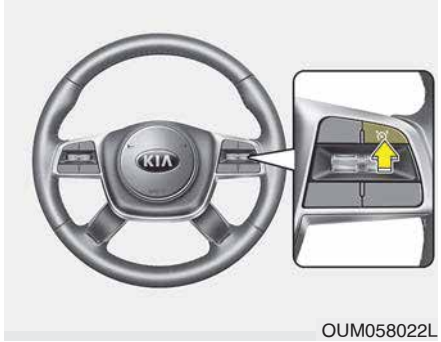

OUM058022L

1. Press the CRUISE / button on the steering wheel, to turn the system on. The cruise indicator light will illuminate.

2. Accelerate to the desired speed, which must be more than approximately 30 km/h (20 mph).

✻ NOTICE - Manual transaxle

For manual transaxle vehicles, you should depress the brake pedal at least once to set the cruise control after starting the engine.

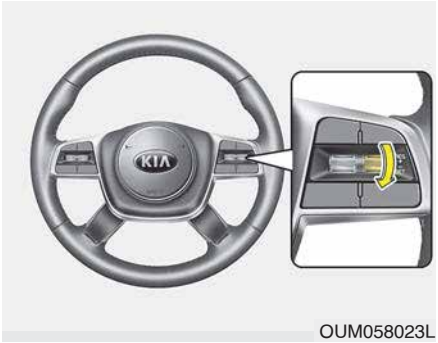

OUM058023L

3. Move the lever down (to SET-), and release it at the desired speed. The cruise set indicator light will illuminate. Release the accelerator pedal at the same time. The desired speed will automatically be maintained.

On a steep grade, the vehicle may slow down or speed up slightly whilst going downhill.

To increase cruise control set speed:

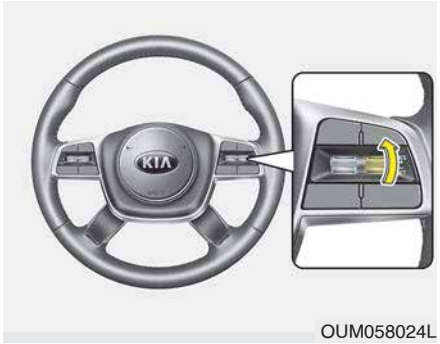

OUM058024L

Follow either of these procedures:

- Move the lever up (to RES+) and hold it. Your vehicle will accelerate. Release the lever at the speed you want.
- Move the lever up (to RES+) and release it immediately. The cruising speed will increase by 2 km/h (1 mph) each time you move the lever up (to RES+) in this manner.

To decrease the cruising speed:

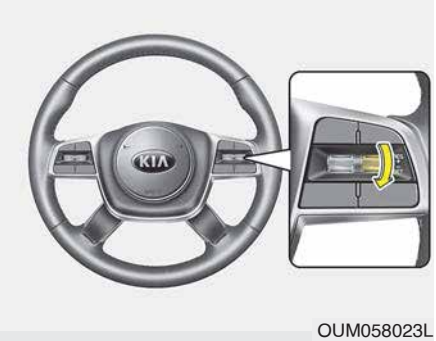

OUM058023L

Follow either of these procedures:

- Move the lever down (to SET-) and hold it. Your vehicle will gradually slow down. Release the lever at the speed you want to maintain.
- Move the lever down (to SET-) and release it immediately. The cruising speed will decrease by 2 km/h (1 mph) each time you move the lever down (to SET-) in this manner.

To temporarily accelerate with the cruise control on:

If you want to speed up temporarily when the cruise control is on, depress the accelerator pedal. Increased speed will not interfere with cruise control operation or change the set speed.

To return to the set speed, take your foot off the accelerator pedal.

To cancel cruise control, do one of the following:

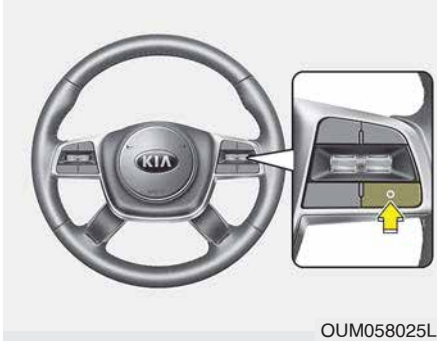

OUM058025L

- Depress the brake pedal.
- Depress the clutch pedal if equipped with a manual transaxle.
- Shift into N (Neutral) if equipped with an automatic transaxle.
- Press the CANCEL/O button located on the steering wheel.
- Decrease the vehicle speed lower than the memory speed by approximately 20 km/h (12 mph).
- Decrease the vehicle speed to less than approximately 25 km/h (15 mph).

Each of these actions will cancel cruise control operation (the cruise set *indicator light will go off), but it will not turn the system off. If you wish to resume cruise control operation, move up the lever (to RES+) located on your steering wheel. You will return to your previously preset speed.*

To resume cruising speed at more than approximately 30 km/h (20 mph).

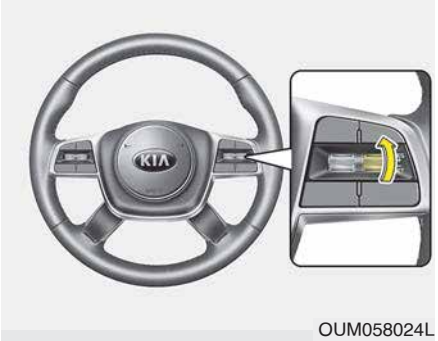

OUM058024L

If any method other than the CRUISE / button was used to cancel cruising speed and the system is still activated, the most recent set speed will automatically resume when the RES+ switch is pushed.

It will not resume, however, if the vehicle speed has dropped below approximately 30 km/h (20 mph).

To turn cruise control off, do one of the following:

- Press the CRUISE/ button (the cruise indicator light will be turn off).
- If your vehicle equipped the speed limit system, press the CRUISE/ button twice. (The cruise indicator light will be turn off.)
- Turn the ignition off.

Both of these actions cancel cruise control operation. If you want to resume cruise control operation, repeat the steps provided in "To set cruise control speed" on the previous page.

MANUAL SPEED LIMIT ASSIST (IF EQUIPPED)

You can set the speed limit when you do not want to drive over a specific speed.

If you drive over the preset speed limit, the warning system operates (set speed limit will blink and chime will sound) until the vehicle speed returns within the speed limit.

✻ NOTICE

Whilst Manual Speed Limit Assist is in operation, the cruise control system cannot be activated.

To set speed limit :

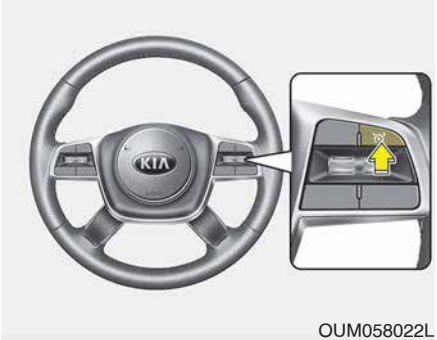

OUM058022L

1. Press the cruise ( ) button twice on the steering wheel, to turn the system on.



OUM058355R

The speed limit indicator light will illuminate.



OUM058023L



OUM058024L

2. Move the lever down (to SET-).
3. Move the lever up (to RES+) or down (to SET-), and release it at the desired speed. Move the lever up (to RES+) or down (to SET-) and hold it. The speed will increase or decrease by 5 km/h (3 mph).

Move the lever up (to RES+) or down (SET-) and release it immediately. The speed will increase or decrease by 1 km/h.

The set speed limit will display on the instrument cluster.

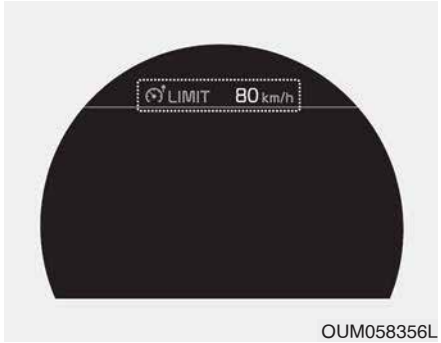

OUM058356L

The set speed limit will be displayed.

To drive over the preset speed limit you must depress hard on the accelerator pedal (more than approximately 80%) until the kick down mechanism works with a clicking noise. Then the set speed limit will blink and chime will sound until you return the vehicle speed within the speed limit.

✻ NOTICE

- **Depressing the accelerator pedal less than approximately 50%, the vehicle will not speed over the preset speed limit but maintain the vehicle speed within the speed limit.**
- **A clicking noise heard from the kick down mechanism by depressing the accelerator pedal fully is a normal condition.**

To turn off the Manual Speed Limit Assist, do one of the following:

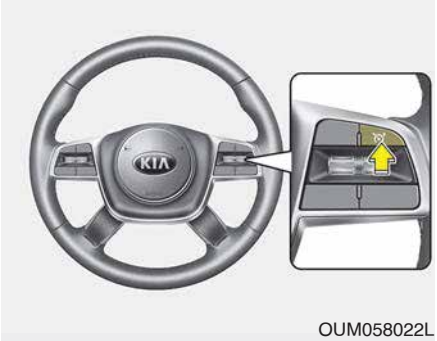

OUM058022L

- Press the cruise ( ) switch.
- Turn the ignition off.

If you press the cancel O switch once, the set speed limit will cancel, but it will not turn the system off. If you wish to reset the speed limit, move the lever up (to RES+) or down (to SET-) to the desired speed.

⚠ CAUTION

The "---" indicator will blink if there is a problem with Manual Speed Limit Assist system.

If this occurs, have the system checked by a professional workshop.

Kia recommends to visit an authorised Kia dealer/service partner.

DRIVE MODE INTEGRATED CONTROL SYSTEM

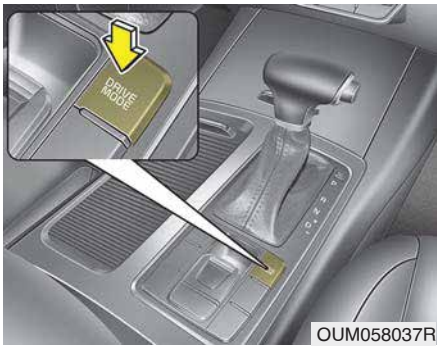

OUM058037R

The drive mode may be selected according to the driver's preference or road condition.

The mode changes whenever the DRIVE MODE button is pressed.

- SMART mode : SMART mode automatically adjusts the driving mode (ECO " COMFORT " SPORT) in accordance with the driver's driving habits.
- COMFORT mode : COMFORT mode provides soft driving and comfortable riding.
- SPORT mode : SPORT mode provides sporty but firm riding.
- ECO mode : ECO mode improves fuel efficiency for eco-friendly driving.

The driving mode will be set to COMFORT or ECO mode when the engine is restarted. if it is in SMART/COMFORT/SPORT mode. COMFORT mode will be set, when the engine is restarted.

If it is in Eco mode, Eco mode will be set when the engine is restarted.

SMART mode



OUM058358L



OUM058359L

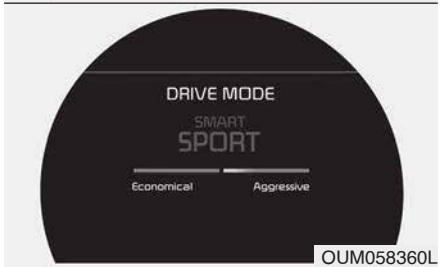

OUM058360L

SMART SMART mode selects the proper driving mode among ECO, COMFORT and SPORT by judging the driver's driving habits (i.e. mild or dynamic) from the brake pedal depression or the steering wheel operation.

- Press the DRIVE MODE button to activate SMART mode. When SMART mode is activated, the indicator illuminates on the instrument cluster.
- The indicator illuminates in blue, when the driver's driving is categorized to be mild. It illuminates in white, when the driver's driving is categorized to be normal. It illuminates in red, when the driver's driving is categorized to be dynamic during abrupt braking or sharp curving.
- The vehicle starts in COMFORT mode, when the engine was turned OFF in SMART mode.
- SMART mode automatically controls the vehicle driving, such as gear shifting patterns, engine torque, riding quality (if equipped with the electronic suspension system), and power distribution (if equipped with the All-Wheel Drive (AWD) system), in accordance with the driver's driving habits.

✻ NOTICE

- **When you mildly drive the vehicle in SMART mode, the driving mode changes to ECO mode to improve fuel efficiency. However, the actual fuel efficiency may differ in accordance with your driving situations (i.e. upward/downward slope, vehicle deceleration/acceleration).**
- **When you dynamically drive the vehicle in SMART mode by abruptly decelerating or sharply curving, the driving mode changes to SPORT mode. However, it may adversely affect fuel economy.**

Various driving situations, which you may encounter in SMART mode

- The driving mode automatically changes to ECO mode after a certain period of time, when you gently depress the accelerator pedal (Your driving is categorized to be mild.).
- The driving mode automatically changes from SMART ECO mode to SMART NORMAL mode after a certain period of time, when you sharply or repetitively depress the accelerator pedal.
- The driving mode automatically changes to SMART COMFORT mode with the same driving patterns, when the vehicle starts to drive on an upward slope of a certain angle. The driving mode automatically returns to SMART ECO mode, when the vehicle enters a leveled road.
- The driving mode automatically changes to SMART SPORT, when you abruptly accelerate the vehicle or repetitively operate the steering wheel (Your driving is categorized to be sporty.). In this mode, your vehicle drives in a lower gear for abrupt accelerating/decelerating and increases the engine brake performance.
- You may still sense the engine brake performance, even when you release the accelerator pedal in SMART SPORT mode. It is because your vehicle remains to be in a lower gear over a certain period of time for next acceleration. Thus, it is a normal driving situation, not indicating any malfunction.
- The driving mode automatically changes to SMART SPORT mode only in harsh driving situations. In most of the normal driving situations, the driving mode sets to be either in SMART ECO mode or in SMART COMFORT mode.

Limitation of SMART mode

The SMART mode may be limited in following situations. (The OFF indicator illuminates in those situations.)

- The driver manually moves the shift lever : It deactivates SMART mode. The vehicle drives, as the driver manually moves the shift lever.
- The cruise control is activated : The cruise system may deactivate the SMART mode. When a higher system is set by the cruise system, it starts to control vehicle speed and deactivates SMART mode. (SMART mode is not deactivated just by activing the cruise system.)
- The transmission oil temperature is either extremely low or extremely high : The SMART mode can be active in most of the normal driving situations. However, an extremely high/ low transmission oil temperature may temporarily deactivate the SMART mode, because the transmission condition is out of normal operation condition.

SPORT/SPORT+ mode

SPORT SPORT mode manages the driving dynamics by automatically adjusting the steering effort, and the engine and transmission control logic for enhanced driver performance.

- When SPORT mode is selected by pressing the DRIVE MODE button, the SPORT indicator (orange colour) will illuminate.
- Whenever the engine is restarted, the Drive Mode will revert back to COMFORT mode. If SPORT mode is desired, re-select SPORT mode from the DRIVE MODE button.
- When SPORT mode is activated:
  - The engine rpm will tend to remain raised over a certain length of time even after releasing the accelerator
  - Upshifts are delayed when accelerating

✻ NOTICE

In SPORT mode, the fuel efficiency may decrease.

ECO mode

ECO When the Drive Mode is set to ECO mode, the engine and transmission control logic are changed to maximize fuel efficiency.

- When ECO mode is selected by pressing the DRIVE MODE button, the ECO indicator (green colour) will illuminate.
- If the vehicle is set to ECO mode, when the engine is turned OFF and restarted the Drive Mode setting will remain in ECO mode.

✻ NOTICE

Fuel efficiency depends on the driver's driving habit and road condition.

When ECO mode is activated:

- The acceleration response may be slightly reduced if the accelerator pedal is depressed moderately.
- The air conditioner performance may be limited.
- The shift pattern of the automatic transmission may change.
- The engine noise may get louder.

The above situations are normal conditions when ECO mode is activated to improve fuel efficiency.

Limitation of ECO mode operation:

If the following conditions occur whilst ECO mode is operating, the system operation is limited even though there is no change in the ECO indicator.

- When the coolant temperature is low:

  The system will be limited until engine performance becomes normal.
- When driving up a hill:

  The system will be limited to gain power when driving uphill because engine torque is restricted.
- When driving the vehicle with the automatic transmission gear shift lever in manual mode.

  The system will be limited according to the shift location.

ECONOMICAL OPERATION

Your vehicle's fuel economy depends mainly on your style of driving, where you drive and when you drive.

Each of these factors affects how many kilometers (miles) you can get from a litre (gallon) of fuel. To operate your vehicle as economically as possible, use the following driving suggestions to help save money in both fuel and repairs:

- Drive smoothly. Accelerate at a moderate rate. Do not make "jackrabbit" starts or full-throttle shifts and maintain a steady cruising speed. Do not race between stoplights. Try to adjust your speed to the traffic so you do not have to change speeds unnecessarily. Avoid heavy traffic whenever possible. Always maintain a safe distance from other vehicles so you can avoid unnecessary braking. This also reduces brake wear.
- Drive at a moderate speed. The faster you drive, the more fuel your vehicle uses. Driving at a moderate speed, especially on the highway, is one of the most effective ways to reduce fuel consumption.
- Do not "ride" the brake or clutch pedal. This can increase fuel consumption and also increase wear on these components. In addition, driving with your foot resting on the brake pedal may cause the brakes to overheat, which reduces their effectiveness and may lead to more serious consequences.
- Take care of your tyres. Keep them inflated to the recommended pressure. Incorrect inflation, either too much or too little, results in unnecessary tyre wear. Check the tyre pressures at least once a month.
- Be sure that the wheels are aligned correctly. Improper alignment can result from hitting kerbs or driving too fast over irregular surfaces. Poor alignment causes faster tyre wear and may also result in other problems as well as greater fuel consumption.
- Keep your vehicle in good condition. For better fuel economy and reduced maintenance costs, maintain your vehicle in accordance with the maintenance schedule in section 8. If you drive your vehicle in severe conditions, more frequent maintenance is required (see section 8 for details).
- Keep your vehicle clean. For maximum service, your vehicle should be kept clean and free of corrosive materials. It is especially important that mud, dirt, ice, etc. not be allowed to accumulate on the underside of the vehicle. This extra weight can result in increased fuel consumption and also contribute to corrosion.
- Travel lightly. Do not carry unnecessary weight in your vehicle. Weight reduces fuel economy.
- Do not let the engine idle longer than necessary. If you are waiting (and not in traffic), turn off your engine and restart only when you're ready to go.

- Remember, your vehicle does not require extended warm-up. After the engine has started, allow the engine to run for 10 to 20 seconds prior to placing the vehicle in gear. In very cold weather, however, give your engine a slightly longer warm-up period.
- Do not "lug" or "over-rev" the engine. Lugging is driving too slowly in too high a gear resulting engine bucking. If this happens, shift to a lower gear. Over-revving is racing the engine beyond its safe limit. This can be avoided by shifting at the recommended speeds.
- Use your air conditioning sparingly. The air conditioning system is operated by engine power so your fuel economy is reduced when you use it.
- Open windows at high speeds can reduce fuel economy.
- Fuel economy is less in crosswinds and headwinds. To help offset some of this loss, slow down when driving in these conditions.

Keeping a vehicle in good operating condition is important both for economy and safety. Therefore, have the system serviced by a professional workshop.

Kia recommends to visit an authorised Kia dealer/service partner.

⚠ WARNING - Engine off during motion

Never turn the engine off to coast down hills or anytime the vehicle is in motion. The power steering and power brakes will not function properly without the engine running. Instead, keep the engine on and downshift to an appropriate gear for engine braking effect. In addition, turning off the ignition whilst driving could engage the steering wheel lock (if equipped) resulting in loss of vehicle steering which could cause serious injury or death.

SPECIAL DRIVING CONDITIONS

Hazardous driving conditions

When hazardous driving conditions are encountered such as water, snow, ice, mud, sand, or similar hazards, follow these suggestions:

- Drive cautiously and allow extra distance for braking.
- Avoid sudden braking or steering.
- When braking with non-ABS brakes pump the brake pedal with a light up-and-down motion until the vehicle is stopped.

⚠ WARNING - ABS

Do not pump the brake pedal on a vehicle equipped with ABS.

- If stalled in snow, mud, or sand, use second gear. Accelerate slowly to avoid spinning the drive wheels.
- Use sand, rock salt, tyre chains, or other non-slip material under the drive wheels to provide traction when stalled in ice, snow, or mud.

⚠ WARNING - Downshifting

Downshifting with an automatic transaxle, whilst driving on slippery surfaces can cause an accident. The sudden change in tyre speed could cause the tyres to skid. Be careful when downshifting on slippery surfaces.

Reducing the risk of a rollover

This multi-purpose passenger vehicle is defined as a Sports Utility Vehicle (SUV).

SUV's have higher ground clearance and a narrower track to make them capable of performing in a wide variety of road applications. Specific design characteristics give them a higher centre of gravity than ordinary vehicles. An advantage of the higher ground clearance is a better view of the road, which allows you to anticipate problems. They are not designed for cornering at the same speeds as conventional passenger vehicles. Due to this risk, driver and passengers are strongly recommended to buckle their seat belts. In a rollover crash, an unbelted person is more likely to die than a person wearing a seat belt. There are steps that a driver can make to reduce the risk of a rollover. If at all possible, avoid sharp turns or abrupt manoeuvre, do not load your roof rack with heavy cargo, and never modify your vehicle in any way.

⚠ WARNING - Rollover

As with other Sports Utility Vehicle (SUV), failure to operate this vehicle correctly may result in loss of control, an accident or vehicle rollover.

- **Utility vehicles have a significantly higher rollover rate than other types of vehicles.**
- **Specific design characteristics (higher ground clearance, narrower track, etc.) give this vehicle a higher centre of gravity than ordinary vehicles.**
- **A SUV is not designed for cornering at the same speeds as conventional vehicles.**
- **Avoid sharp turns or abrupt manoeuvre.**
- **In a rollover crash, an unbelted person is significantly more likely to die than a person wearing a seat belt. Make sure everyone in the vehicle is properly buckled up.**

⚠ WARNING

Your vehicle is equipped with tyres designed to provide safe ride and handling capability. Do not use a size and type of tyre and wheel that is different from the one that is originally installed on your vehicle. It can affect the safety and performance of your vehicle, which could lead to steering failure or rollover and serious injury. When replacing the tyres, be sure to equip all four tyres with the tyre and wheel of the same size, type, tread, brand and load-carrying capacity. If you nevertheless decide to equip your vehicle with any tyre/wheel combination not recommended by Kia for off road driving, you should not use these tyres for highway driving.

Rocking the vehicle

If it is necessary to rock the vehicle to free it from snow, sand, or mud, first turn the steering wheel right and left to clear the area around your front wheels. Then, shift back and forth between 1 (First) and R (Reverse) in vehicles equipped with a manual transaxle or R (Reverse) and any forward gear in vehicles equipped with an automatic transaxle. Do not race the engine, and spin the wheels as little as possible. If you are still stuck after a few tries, have the vehicle pulled out by a tow vehicle to avoid engine overheating and possible damage to the transaxle.

⚠ CAUTION

Prolonged rocking may cause engine over-heating, transaxle damage or failure, and tyre damage.

⚠ WARNING - Spinning tyres

Do not spin the wheels, especially at speeds more than 56 km/h (35 mph). Spinning the wheels at high speeds when the vehicle is stationary could cause a tyre to overheat which could result in tyre damage that may injure bystanders.

✻ NOTICE

The ESC system should be turned OFF prior to rocking the vehicle.

⚠ WARNING

If your vehicle becomes stuck in snow, mud, sand, etc., then you may attempt to rock the vehicle free by moving it forward and backward. Do not attempt this procedure if people or objects are anywhere near the vehicle. During the rocking operation the vehicle may suddenly move forward or backward as it becomes unstuck, causing injury or damage to nearby people or objects.

Smooth cornering



Avoid braking or gear changing in corners, especially when roads are wet. Ideally, corners should always be taken under gentle acceleration. If you follow these suggestions, tyre wear will be held to a minimum.

Driving at night


OUM054140

Because night driving presents more hazards than driving in the daylight, here are some important tips to remember:

- Slow down and keep more distance between you and other vehicles, as it may be more difficult to see at night, especially in areas where there may not be any street lights.
- Adjust your mirrors to reduce the glare from other driver's headlights.
- Keep your headlights clean and properly aimed on vehicles not equipped with the automatic headlight aiming feature. Dirty or improperly aimed headlights will make it much more difficult to see at night.
- Avoid staring directly at the headlights of oncoming vehicles. You could be temporarily blinded, and it will take several seconds for your eyes to readjust to the darkness.

Driving in the rain


OUM058139L

Rain and wet roads can make driving dangerous, especially if you're not prepared for the slick pavement. Here are a few things to consider when driving in the rain:

- A heavy rainfall will make it harder to see and will increase the distance needed to stop your vehicle, so slow down.
- Keep your windscreen wiping equipment in good shape. Replace your windscreen wiper blades when they show signs of streaking or missing areas on the windscreen.

- If your tyres are not in good condition, making a quick stop on wet pavement can cause a skid and possibly lead to an accident. Be sure your tyres are in good shape.
- Turn on your headlights to make it easier for others to see you.
- Driving too fast through large puddles can affect your brakes. If you must go through puddles, try to drive through them slowly.
- If you believe you may have gotten your brakes wet, apply them lightly whilst driving until normal braking operation returns.

Driving in flooded areas

Avoid driving through flooded areas unless you are sure the water is no higher than the bottom of the wheel hub. Drive through any water slowly. Allow adequate stopping distance because brake performance may be affected.

After driving through water, dry the brakes by gently applying them several times whilst the vehicle is moving slowly.

Driving off-road

Drive carefully off-road because your vehicle may be damaged by rocks of roots of trees. Become familiar with the off-road conditions where you are going to drive before you begin driving.

Highway driving

Tyres



Adjust the tyre inflation pressures to specification. Low tyre inflation pressures will result in overheating and possible failure of the tyres.

Avoid using worn or damaged tyres which may result in reduced traction or tyre failure.

✻ NOTICE

Never exceed the maximum tyre inflation pressure shown on the tyres.

⚠ WARNING

- **Underinflated or overinflated tyres can cause poor handling, loss of vehicle control, and sudden tyre failure leading to accidents, injuries, and even death. Always check the tyres for proper inflation before driving. For proper tyre pressures, refer to section 9, "Tyres and wheels".**
- **Driving on tyres with no or insufficient tread is dangerous. Worn-out tyres can result in loss of vehicle control, collisions, injury, and even death. Worn-out tyres should be replaced as soon as possible and should never be used for driving. Always check the tyre tread before driving your vehicle. For further information and tread limits, refer to section 8, "Tyres and wheels".**

Fuel, engine coolant and engine oil

High speed travel consumes more fuel than urban motoring. Do not forget to check both engine coolant and engine oil.

Drive belt

A loose or damaged drive belt may result in overheating of the engine.

WINTER DRIVING

Severe weather conditions in the winter result in greater wear and other problems. To minimise the problems of winter driving, you should follow these suggestions:

Snowy or Icy conditions

To drive your vehicle in deep snow, it may be necessary to use snow tyres or to install tyre chains on your tyres. If snow tyres are needed, it is necessary to select tyres equivalent in size and type of the original equipment tyres. Failure to do so may adversely affect the safety and handling of your vehicle. Furthermore, speeding, rapid acceleration, sudden brake applications, and sharp turns are potentially very hazardous practices.

During deceleration, use engine braking to the fullest extent. Sudden brake applications on snowy or icy roads may cause skids to occur. You need to keep sufficient distance between the vehicle in operation in front and your vehicle. Also, apply the brake gently. It should be noted that installing tyre chains on the tyre will provide a greater driving force, but will not prevent side skids.

✻ NOTICE

Tyre chains are not legal in all countries. Check the country laws before fitting tyre chains.

Snow tyres

If you mount snow tyres on your vehicle, make sure they are radial tyres of the same size and load range as the original tyres. Mount snow tyres on all four wheels to balance your vehicle's handling in all weather conditions. Keep in mind that the traction provided by snow tyres on dry roads may not be as high as your vehicle's original equipment tyres. You should drive cautiously even when the roads are clear. Check with the tyre dealer for maximum speed recommendations.

⚠ WARNING - Snow tyre size

Snow tyres should be equivalent in size and type to the vehicle's standard tyres. Otherwise, the safety and handling of your vehicle may be adversely affected.

Do not install studded tyres without first checking local, state and municipal regulations for possible restrictions against their use.

Tyre chains


OUM058136L

Since the sidewalls of radial tyres are thinner, they can be damaged by mounting some types of snow chains on them. Therefore, the use of snow tyres is recommended instead of snow chains. Do not mount tyre chains on vehicles equipped with aluminum wheels; snow chains may cause damage to the wheels. If snow chains must be used, use wire-type chains with a thickness of less than 12 mm (0.47 in). Damage to your vehicle caused by improper snow chain use is not covered by your vehicle manufacturers warranty.

When using tyre chains, attach them to the drive wheels as follows.

FWD/AWD: Front Wheel Drive

⚠ CAUTION

- ***Make sure the snow chains are the correct size and type for your tyres. Incorrect snow chains can cause damage to the vehicle body and suspension and may not be covered by your vehicle manufacturer warranty. Also, the snow chain connecting hooks may be damaged from contacting vehicle components causing the snow chains to come loose from the tyre. Make sure the snow chains are SAE class "S" certified.***
- ***Always check chain installation for proper mounting after driving approximately 0.5 to 1 km (0.3 to 0.6 miles) to ensure safe mounting. Retighten or remount the chains if they are loose.***

Chain installation

When installing chains, follow the manufacturer's instructions and mount them as tightly as you can. Drive slowly with chains installed. If you hear the chains contacting the body or chassis, stop and tighten them. If they still make contact, slow down until it stops. Remove the chains as soon as you begin driving on cleared roads.

⚠ WARNING - Mounting chains

When mounting snow chains, park the vehicle on level ground away from traffic. Turn on the vehicle Hazard Warning flashers and place a triangular emergency warning device behind the vehicle if available. Always place the vehicle in P (Park), apply the parking brake and turn off the engine before installing snow chains.

⚠ WARNING - Tyre chains

- **The use of chains may adversely affect vehicle handling.**
- **Do not exceed 30 km/h (20 mph) or the chain manufacturer's recommended speed limit, whichever is lower.**
- **Drive carefully and avoid bumps, holes, sharp turns, and other road hazards, which may cause the vehicle to bounce.**
- **Avoid sharp turns or locked-wheel braking.**

⚠ CAUTION

- ***Chains that are the wrong size or improperly installed can damage your vehicle's brake lines, suspension, body and wheels.***
- ***Stop driving and retighten the chains any time you hear them hitting the vehicle.***

Use high quality ethylene glycol coolant

Your vehicle is delivered with high quality ethylene glycol coolant in the cooling system. It is the only type of coolant that should be used because it helps prevent corrosion in the cooling system, lubricates the water pump and prevents freezing. Be sure to replace or replenish your coolant in accordance with the maintenance schedule in section 8. Before winter, have your coolant tested to assure that its freezing point is sufficient for the temperatures anticipated during the winter.

Check battery and cables

Winter puts additional burdens on the battery system. Visually inspect the battery and cables as described in section 8. Have the level of charge in your battery checked by a professional workshop. Kia recommends to visit an authorised Kia dealer/service partner.

Change to "winter weight" oil if necessary

In some climates it is recommended that a lower viscosity "winter weight" oil be used during cold weather. See section 9 for recommendations. If you aren't sure what weight oil you should use, Kia recommends to consult an authorised Kia dealer/service partner.

Check spark plugs and ignition system

Inspect your spark plugs as described in section 8 and replace them if necessary. Also check all ignition wiring and components to be sure they are not cracked, worn or damaged in any way.

To keep locks from freezing

To keep the locks from freezing, squirt an approved de-icer fluid or glycerine into the key opening. If a lock is covered with ice, squirt it with an approved de-icing fluid to remove the ice. If the lock is frozen internally, you may be able to thaw it out by using a heated key. Handle the heated key with care to avoid injury.

Use approved window washer anti-freeze in system

To keep the water in the window washer system from freezing, add an approved window washer anti-freeze solution in accordance with instructions on the container. Window washer anti-freeze is available from an authorised Kia dealer/service partner and most auto parts outlets. Do not use engine coolant or other types of anti-freeze as these may damage the paint finish.

Don't let your parking brake freeze

Under some conditions your parking brake can freeze in the engaged position. This is most likely to happen when there is an accumulation of snow or ice around or near the rear brakes or if the brakes are wet. If there is a risk the parking brake may freeze, apply it only temporarily whilst you put the shift lever in P (automatic transaxle) or in first or reverse gear (manual transaxle) and block the rear wheels so the vehicle cannot roll. Then release the parking brake.

Don't let ice and snow accumulate underneath

Under some conditions, snow and ice can build up under the fenders and interfere with the steering. When driving in severe winter conditions where this may happen, you should periodically check underneath the vehicle to be sure the movement of the front wheels and the steering components is not obstructed.

Carry emergency equipment

Depending on the severity of the weather, you should carry appropriate emergency equipment. Some of the items you may want to carry include tyre chains, tow straps or chains, flashlight, emergency flares, sand, shovel, jumper cables, window scraper, gloves, ground cloth, coveralls, blanket, etc.

TRAILER TOWING (IF EQUIPPED)

If you are considering towing with your vehicle, you should first check with your country's Department of Motor Vehicles to determine their legal requirements.

Since laws vary the requirements for towing trailers, cars, or other types of vehicles or apparatus may differ. Kia recommends to ask an authorised Kia dealer/service partner.

⚠ WARNING - Towing a trailer

If you don't use the correct equipment and/or drive improperly, you can lose control when you pull a trailer. For example, if the trailer is too heavy, the brakes may not work well - or even at all. You and your passengers could be seriously or fatally injured. Pull a trailer only if you have followed all the steps in this section.

⚠ WARNING - Weight limits

Before towing, make sure the total trailer weight, GCW (gross combination weight), GVW (gross vehicle weight), GAW (gross axle weight) and trailer tongue load are all within the limits.

✻ NOTICE - For Europe

- The technically permissible maximum load on the rear axle(s) may be exceeded by not more than 15 % and the technically permissible maximum laden mass of the vehicle may be exceeded by not more than 10 % or 100 kg (220.4 lbs), whichever value is lower. In this case, do not exceed 100 km/h (62.1 mph) for vehicle of category M1 or 80 km/h (49.7 mph) for vehicle of category N1.

(Continued)

(Continued)

- When towing a trailer, the additional load imposed at the trailer coupling device may cause the rear tyre maximum load ratings to be exceeded, but not by more than 15%. In such a case, do not exceed 100km/h, and the rear tyre pressure should be at least 20 kPa(0.2 bar) above the tyre pressure(s) as recommended for normal use (i.e. without a trailer attached).

⚠ CAUTION

Pulling a trailer improperly can damage your vehicle and result in costly repairs not covered by your warranty. To pull a trailer correctly, follow the advice in this section.

Your vehicle can tow a trailer. To identify what the vehicle trailering capacity is for your vehicle, you should read the information in “Weight of the trailer” that appears later in this section.

Remember that trailering is different than just driving your vehicle by itself. Trailering means changes in handling, durability, and fuel economy. Successful, safe trailering requires correct equipment, and it has to be used properly.

This section contains many time-tested, important trailering tips and safety rules. Many of these are important for your safety and that of your passengers. Please read this section carefully before you pull a trailer.

Load-pulling components such as the engine, transaxle, wheel assemblies, and tyres are forced to work harder against the load of the added weight. The engine is required to operate at relatively higher speeds and under greater loads. This additional burden generates extra heat. The trailer also considerably adds wind resistance, increasing the pulling requirements.

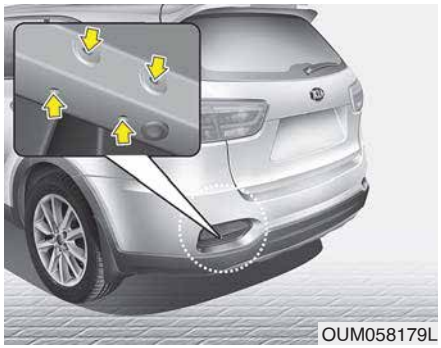

✻ NOTICE - Location of trailer mounting

The mounting hole for hitches are located on both sides of the underbody behind the rear tyres.

Hitches

It's important to have the correct hitch equipment. Crosswinds, large trucks going by, and rough roads are a few reasons why you'll need the right hitch. Here are some rules to follow:

- Do you have to make any holes in the body of your vehicle when you install a trailer hitch? If you do, then be sure to seal the holes later when you remove the hitch.

  If you do not seal them, deadly carbon monoxide (CO) from your exhaust can get into your vehicle, as well as dirt and water.
- The bumpers on your vehicle are not intended for hitches. Do not attach rental hitches or other bumper-type hitches to them. Use only a frame-mounted hitch that does not attach to the bumper.
- Kia trailer hitch accessory is available at an authorised Kia dealer/service partner.

Safety chains

You should always attach chains between your vehicle and your trailer. Cross the safety chains under the tongue of the trailer so that the tongue will not drop to the road if it becomes separated from the hitch.

Instructions about safety chains may be provided by the hitch manufacturer or by the trailer manufacturer. Follow the manufacturer's recommendation for attaching safety chains. Always leave just enough slack so you can turn with your trailer. And, never allow safety chains to drag on the ground.

Trailer brakes

If your trailer is equipped with a braking system, make sure it conforms to your country's regulations and that it is properly installed and operating correctly.

If your trailer weight exceeds the maximum allowed weight without trailer brakes, then the trailer will also require its own brakes as well. Be sure to read and follow the instructions for the trailer brakes so you'll be able to install, adjust and maintain them properly.

- Do not tap into or modify your vehicle's brake system.

⚠ WARNING - Trailer brakes

Do not use a trailer with its own brakes unless you are absolutely certain that you have properly set up the brake system. This is not a task for amateurs. Use an experienced, competent trailer shop for this work.

Driving with a trailer

Towing a trailer requires a certain amount of experience. Before setting out for the open road, you must get to know your trailer. Acquaint yourself with the feel of handling and braking with the added weight of the trailer. And always keep in mind that the vehicle you are driving is now a good deal longer and not nearly so responsive as your vehicle is by itself.

Before you start, check the trailer hitch and platform, safety chains, electrical connector(s), lights, tyres and mirror adjustment. If the trailer has electric brakes, start your vehicle and trailer moving and then apply the trailer brake controller by hand to be sure the brakes are working. This lets you check your electrical connection at the same time.

During your trip, check occasionally to be sure that the load is secure, and that the lights and any trailer brakes are still working.

Following distance

Stay at least twice as far behind the vehicle ahead as you would when driving your vehicle without a trailer. This can help you avoid situations that require heavy braking and sudden turns.

Passing

You'll need more passing distance up ahead when you're towing a trailer. And, because of the increased vehicle length, you'll need to go much farther beyond the passed vehicle before you can return to your lane. Due to the added load to the engine when going uphill the vehicle may also take longer to pass than it would on flat ground.

Backing up

Hold the bottom of the steering wheel with one hand. Then, to move the trailer to the left, just move your hand to the left. To move the trailer to the right, move your hand to the right. Always back up slowly and, if possible, have someone guide you.

Making turns

When you're turning with a trailer, make wider turns than normal. Do this so your trailer won't strike soft shoulders, kerbs, road signs, trees, or other objects near the edge of the road. Avoid jerky or sudden manoeuvre. Signal well in advance before turning or lane changes.

Turn signals when towing a trailer

When you tow a trailer, your vehicle has to have a different turn signal flasher and extra wiring. The green arrows on your instrument panel will flash whenever you signal a turn or lane change. Properly connected, the trailer lights will also flash to alert other drivers you're about to turn, change lanes, or stop.

When towing a trailer, the green arrows on your instrument panel will flash for turns even if the bulbs on the trailer are burned out. Thus, you may think drivers behind you are seeing your signals when, in fact, they are not. It is important to check occasionally to be sure the trailer bulbs are still working. You must also check the lights every time you disconnect and then reconnect the wires.

Do not connect a trailer lighting system directly to your vehicle's lighting system. Use only an approved trailer wiring harness.

Have yourself assisted by a professional workshop in installing the wiring harness. Kia recommends to visit an authorised Kia dealer/service partner.

⚠ WARNING

Failure to use an approved trailer wiring harness could result in damage to the vehicle electrical system and/or personal injury.

Driving on grades

Reduce speed and shift to a lower gear before you start down a long or steep downgrade. If you don't shift down, you might have to use your brakes so much that they would get hot and no longer operate efficiently.

On a long uphill grade, shift down and reduce your speed to around 70 km/h (45 mph) to reduce the possibility of engine and transaxle overheating.

If your trailer weighs more than the maximum trailer weight without trailer brakes and you have an automatic transaxle, you should drive in D (Drive) when towing a trailer.

Operating your vehicle in D (Drive) when towing a trailer will minimise heat build up and extend the life of your transaxle.

⚠ CAUTION

- ***When towing a trailer on steep grades (in excess of 6%) pay close attention to the engine coolant temperature gauge to ensure the engine does not overheat.***

  If the needle of the coolant temperature gauge moves across the dial towards "130/H (HOT)", pull over and stop as soon as it is safe to do so, and allow the engine to idle until it cools down. You may proceed once the engine has cooled sufficiently.

- ***You must decide driving speed depending on trailer weight and uphill grade to reduce the possibility of engine and transaxle overheating.***

Parking on hills

Generally, if you have a trailer attached to your vehicle, you should not park your vehicle on a hill. People can be seriously or fatally injured, and both your vehicle and the trailer can be damaged if they unexpectedly roll down hill.

⚠ WARNING - Parking on a hill

Parking your vehicle on a hill with a trailer attached could cause serious injury or death, should the trailer break loose or the brake stops working.

However, if you ever have to park your trailer on a hill, here is how to do it:

1. Pull the vehicle into the parking space. Turn the steering wheel in the direction of the kerb (right if headed down hill, left if headed up hill).
2. If the vehicle has a manual transaxle, place the car in neutral. If the vehicle has an automatic transaxle, place the car in P (Park).
3. Set the parking brake and shut off the vehicle.
4. Place chocks under the trailer wheels on the down hill side of the wheels.
5. Start the vehicle, hold the brakes, shift to neutral, release the parking brake and slowly release the brakes until the trailer chocks absorb the load.
6. Reapply the brakes, reapply the parking brake and shift the vehicle to R (Reverse) for manual transaxle or P (Park) for automatic transaxle.
7. Shut off the vehicle and release the vehicle brakes but leave the parking brake set.

⚠ WARNING - Parking brake

It can be dangerous to get out of your vehicle if the parking brake is not firmly set.

If you have left the engine running, the vehicle can move suddenly. You or others could be seriously or fatally injured.

When you are ready to leave after parking on a hill

1. With the manual transaxle in Neutral or automatic transaxle in P (Park), apply your brakes and hold the brake pedal down whilst you:
   - Start your engine;
   - Shift into gear; and
   - Release the parking brake.
2. Slowly remove your foot from the brake pedal.
3. Drive slowly until the trailer is clear of the chocks.
4. Stop and have someone pick up and store the chocks.

Maintenance when trailer towing

Your vehicle will need service more often when you regularly pull a trailer. Important items to pay particular attention to include engine oil, automatic transaxle fluid, axle lubricant and cooling system fluid. Brake condition is another important item to frequently check. Each item is covered in this manual, and the Index will help you find them quickly. If you're trailering, it is a good idea to review these sections before you start your trip.

Do not forget to also maintain your trailer and hitch. Follow the maintenance schedule that accompanied your trailer and check it periodically. Preferably, conduct the check at the start of each day's driving. Most importantly, all hitch nuts and bolts should be tight.

⚠ CAUTION

- ***Due to higher load during trailer usage, overheating might occur in hot days or during uphill driving. If the coolant gauge indicates overheating, switch off the air conditioner and stop the vehicle in a safe area to cool down the engine.***
- ***When towing check transaxle fluid more frequently.***
- ***If your vehicle is not equipped with an air conditioner, you should install a condenser fan to improve engine performance when towing a trailer.***

If you do decide to pull a trailer

Here are some important points if you decide to pull a trailer:

- Consider using a sway control. You can ask a hitch dealer about sway control.
- Do not do any towing with your car during its first 2,000 km (1,200 miles) in order to allow the engine to properly break in. Failure to heed this caution may result in serious engine or transaxle damage.
- When towing a trailer, Kia recommends that you consult an authorised Kia dealer/service partner on additional requirements such as a towing kit, etc.
- Always drive your vehicle at a moderate speed (less than 100 km/h (60 mph)).
- On a long uphill grade, do not exceed 70 km/h (45 mph) or the posted towing speed limit, whichever is lower.
- The chart contains important considerations that have to do with weight:

Weight of the trailer

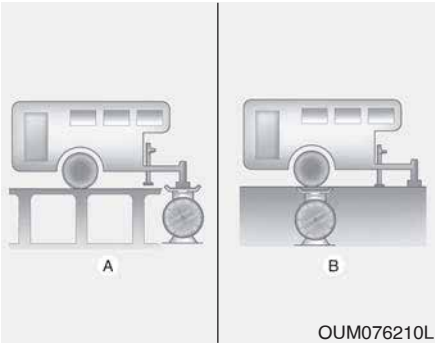

A : Tongue Load

B : Total Trailer Weight

What is the maximum safe weight of a trailer? It should never weigh more than the maximum trailer weight with trailer brakes. But even that can be too heavy.

It depends on how you plan to use your trailer. For example, speed, altitude, road grades, outside temperature and how often your vehicle is used to pull a trailer are all important. The ideal trailer weight can also depend on any special equipment that you have on your vehicle.

✻ NOTICE

With increasing altitude the engine performance decreases. From 1,000m above sea level and for every 1,000m thereafter 10% of vehicle/trailer weight (trailer weighter + gross vehicle weight) must be deducted.

Weight of the trailer tongue

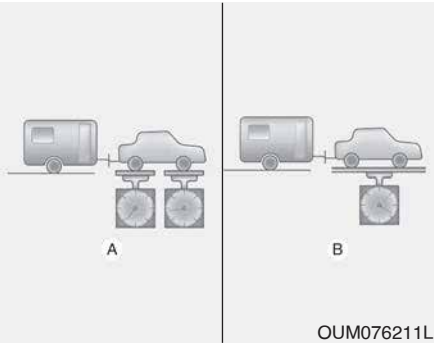

A : Gross Axle Weight

B : Gross Vehicle Weight

The tongue load of any trailer is an important weight to measure because it affects the total gross vehicle weight (GVW) of your vehicle. This weight includes the kerb weight of the vehicle, any cargo you may carry in it, and the people who will be riding in the vehicle. And if you will tow a trailer, you must add the tongue load to the GVW because your vehicle will also be carrying that weight.

The trailer tongue should weigh a maximum of 10% of the total loaded trailer weight, within the limits of the maximum permissible trailer tongue load.

After you've loaded your trailer, weigh the trailer and then the tongue, separately, to see if the weights are proper. If they aren't, you may be able to correct them simply by moving some items around in the trailer.

⚠ WARNING - Trailer

- **Never load a trailer with more weight in the rear than in the front. The front should be loaded with approximately 60% of the total trailer load; the rear should be loaded with approximately 40% of the total trailer load.**
- **Never exceed the maximum weight limits of the trailer or trailer towing equipment. Improper loading can result in damage to your vehicle and/or personal injury. Check weights and loading at a commercial scale or highway patrol office equipped with scales.**
- **An improperly loaded trailer can cause loss of vehicle control.**

VEHICLE WEIGHT

This section will guide you in the proper loading of your vehicle and/or trailer, to keep your loaded vehicle weight within its design rating capability, with or without a trailer. Properly loading your vehicle will provide maximum return of the vehicle design performance. Before loading your vehicle, familiarize yourself with the following terms for determining your vehicle's weight ratings, with or without a trailer, from the vehicle's specifications and the certification label:

Base kerb weight

This is the weight of the vehicle including a full tank of fuel and all standard equipment. It does not include passengers, cargo, or optional equipment.

Vehicle kerb weight

This is the weight of your new vehicle when you picked it up from your dealer plus any aftermarket equipment.

Cargo weight

This figure includes all weight added to the Base Kerb Weight, including cargo and optional equipment.

GAW (Gross axle weight)

This is the total weight placed on each axle (front and rear) - including vehicle kerb weight and all payload.

GAWR (Gross axle weight rating)

This is the maximum allowable weight that can be carried by a single axle (front or rear). These numbers are shown on the certification label.

The total load on each axle must never exceed its GAWR.

GVW (Gross vehicle weight)

This is the Base Kerb Weight plus actual Cargo Weight plus passengers.

GVWR (Gross vehicle weight rating)

This is the maximum allowable weight of the fully loaded vehicle (including all options, equipment, passengers and cargo). The GVWR is shown on the certification label.

Overloading

⚠ WARNING - Vehicle weight

The gross axle weight rating (GAWR) and the gross vehicle weight rating (GVWR) for your vehicle are on the certification label attached to the driver's (or front passenger's) door. Exceeding these ratings can cause an accident or vehicle damage. You can calculate the weight of your load by weighing the items (and people) before putting them in the vehicle. Be careful not to overload your vehicle.

What to do in an emergency

Road warning 7-2
- Hazard warning flasher 7-2

In case of an emergency whilst driving 7-3
- If the engine stalls at a crossroad or crossing. 7-3
- If you have a flat tyre whilst driving 7-3
- If engine stalls whilst driving 7-3

If the engine will not start 7-4
- If engine doesn't turn over or turns over slowly 7-4
- If engine turns over normally but does not start 7-4

Emergency starting 7-5
- Jump starting. 7-5
- Push-starting 7-7

If the engine overheats. 7-8

If you have a flat tyre (with spare tyre) 7-19
- Jack and tools 7-19
- Removing and storing the spare tyre 7-10
- Changing tyres. 7-12
- Jack label. 7-18

Towing. 7-19
- Towing service. 7-19
- Removable towing hook. 7-20
- Emergency towing. 7-21

ROAD WARNING

Hazard warning flasher

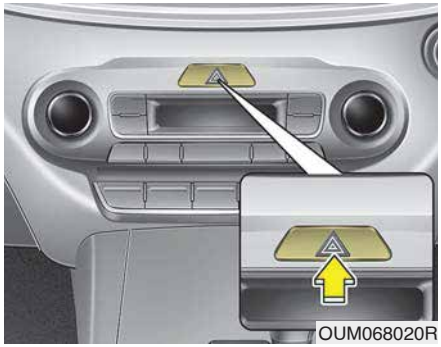

The hazard warning flasher serves as a warning to other drivers to exercise extreme caution when approaching, overtaking, or passing your vehicle.

It should be used whenever emergency repairs are being made or when the vehicle is stopped near the edge of a roadway.

Depress the flasher switch with the ignition switch in any position. The flasher switch is located in the centre console switch panel. All turn signal lights will flash simultaneously.

- The hazard warning flasher operates whether your vehicle is running or not.
- The turn signals do not work when the hazard flasher is on.
- Care must be taken when using the hazard warning flasher whilst the vehicle is being towed.

IN CASE OF AN EMERGENCY WHILST DRIVING

If the engine stalls at a crossroad or crossing

- If the engine stalls at a crossroad or crossing, set the shift lever in the N (Neutral) position and then push the vehicle to a safe place.
- If your vehicle has a manual transaxle not equipped with a ignition lock switch, the vehicle can move forward by shifting to the 2 (second) or 3 (third) gear and then turning the starter without depressing the clutch pedal.

If you have a flat tyre whilst driving

If a tyre goes flat whilst you are driving:

1. Take your foot off the accelerator pedal and let the vehicle slow down whilst driving straight ahead. Do not apply the brakes immediately or attempt to pull off the road as this may cause a loss of control. When the vehicle has slowed down to such a speed that it is safe to do so, brake carefully and pull off the road. Drive off the road as far as possible and park on a firm level ground. If you are on a divided highway, do not park in the median area between the two traffic lanes.
2. When the vehicle is stopped, turn on your emergency hazard flashers, set the parking brake and put the transaxle in P (automatic transaxle) or reverse (manual transaxle).
3. Have all passengers get out of the vehicle. Be sure they all get out on the side of the vehicle that is away from traffic.
4. When changing a flat tyre, follow the instruction provided later in this section.

If engine stalls whilst driving

1. Reduce your speed gradually, keeping a straight line. Move cautiously off the road to a safe place.
2. Turn on your emergency flashers.
3. Try to start the engine again. If your vehicle does not start, consult a professional workshop. Kia recommends to consult an authorised Kia dealer/service partner.

IF THE ENGINE WILL NOT START

If engine doesn't turn over or turns over slowly

1. If your vehicle has an automatic transaxle, be sure the shift lever is in N (Neutral) or P (Park) and the emergency brake is set.
2. Check the battery connections to be sure they are clean and tight.
3. Turn on the interior light. If the light dims or goes out when you operate the starter, the battery is discharged.
4. Check the starter connections to be sure they are securely tightened.
5. Do not push or pull the vehicle to start it. See instructions for "Jump starting".

⚠ WARNING

If the engine will not start, do not push or pull the vehicle to start it. This could result in a collision or cause other damage. In addition, push or pull starting may cause the catalytic converter to be overloaded and create a fire hazard.

If engine turns over normally but does not start

1. Check the fuel level.
2. With the ignition switch in the LOCK position, check all connectors at the ignition coils and spark plugs. Reconnect any that may be disconnected or loose.
3. Check the fuel line in the engine compartment.
4. If the engine still does not start, call a professional workshop. Kia recommends to call an authorised Kia dealer/service partner.

EMERGENCY STARTING

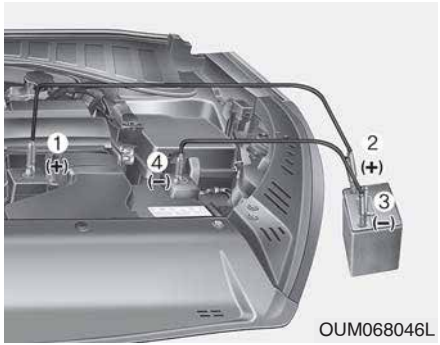

Connect cables in numerical order and disconnect in reverse order.

Jump starting

Jump starting can be dangerous if done incorrectly. Therefore, to avoid harm to yourself or damage to your vehicle or battery, follow the jump starting procedures. If in doubt, we strongly recommend that you have a competent technician or towing service jump start your vehicle.

⚠ CAUTION

Use only a 12-volt jumper system. You can damage a 12-volt starting motor, ignition system, and other electrical parts beyond repair by use of a 24-volt power supply (either two 12-volt batteries in series or a 24-volt motor generator set).

⚠ WARNING - Battery

Never attempt to check the electrolyte level of the battery as this may cause the battery to rupture or explode causing serious injury.

⚠ WARNING - Battery

- **Keep all flames or sparks away from the battery. The battery produces hydrogen gas which may explode if exposed to flame or sparks.**

  If these instructions are not followed exactly, serious personal injury and damage to the vehicle may occur! If you are not sure how to follow this procedure, seek qualified assistance. Automobile batteries contain sulfuric acid. This is poisonous and highly corrosive. When jump starting, wear protective glasses and be careful not to get acid on yourself, your clothing or on the vehicle.
- **Do not attempt to jump start the vehicle if the discharged battery is frozen or if the electrolyte level is low; the battery may rupture or explode.**

(Continued)

(Continued)

- **Do not allow the (+) and (-) jumper cables to touch. It may cause sparks.**
- **The battery may rupture or explode when you jump start with a low or frozen battery.**

Jump starting procedure

1. Make sure the booster battery is 12-volt and that its negative terminal is grounded.
2. If the booster battery is in another vehicle, do not allow the vehicles come in contact.
3. Turn off all electrical devices in the vehicle.
4. Connect the jumper cables in the exact sequence shown in the illustration. First connect one end of a jumper cable to the positive terminal of the discharged battery (1), then connect the other end to the positive terminal on the booster battery (2).

   Proceed to connect one end of the other jumper cable to the negative terminal of the booster battery (3), then the other end to a solid, stationary, metallic point (for example, the engine lifting bracket) away from the battery (4). Do not connect it to or near any part that moves when the engine is cranked.

Do not allow the jumper cables to contact anything except the correct battery terminals or the correct ground. Do not lean over the battery when making connections.

⚠ CAUTION - Battery cables

Do not connect the jumper cable from the negative terminal of the booster battery to the negative terminal of the discharged battery. This can cause the discharged battery to overheat and crack, releasing battery acid.

Make sure to connect one end of the jumper cable to the negative terminal of the booster battery, and the other end to a metalic point, far away from the battery.

5. Start the engine of the vehicle with the booster battery and let it run at 2,000 rpm, then start the engine of the vehicle with the discharged battery.

If the cause of your battery discharging is not apparent, have the system checked by a professional workshop. Kia recommends to visit an authorised Kia dealer/service partner.

Push-starting

Your manual transaxle-equipped vehicle should not be push-started because it might damage the emission control system.

Vehicles equipped with automatic transaxle cannot be push-started.

Follow the directions in this section for jump-starting.

⚠ WARNING

Never tow a vehicle to start it because the sudden surge forward when the engine starts could cause a collision with the tow vehicle.

IF THE ENGINE OVERHEATS

If your temperature gauge indicates overheating, you will experience a loss of power, or hear loud pinging or knocking, the engine is probably too hot. If this happens, you should:

1. Pull off the road and stop as soon as it is safe to do so.
2. Place the shift lever in P (automatic transaxle) or neutral (manual transaxle) and set the parking brake. If the air conditioning is on, turn it off.
3. If engine coolant is running out under the vehicle or steam is coming out from the bonnet, stop the engine. Do not open the bonnet until the coolant has stopped running or the steaming has stopped. If there is no visible loss of engine coolant and no steam, leave the engine running and check to be sure the engine cooling fan is operating. If the fan is not running, turn the engine off.
4. Check to see if the water pump drive belt is missing. If it is not missing, check to see that it is tight.

If the drive belt seems to be satisfactory, check for coolant leaking from the radiator, hoses or under the vehicle. (If the air conditioning had been in use, it is normal for cold water to be draining from it when you stop).

⚠ WARNING

Whilst the engine is running, keep hair, hands and clothing away from moving parts such as the fan and drive belts to prevent injury.

5. If the water pump drive belt is broken or engine coolant is leaking out, stop the engine immediately and call a professional workshop. Kia recommends to call an authorised Kia dealer/service partner.

⚠ WARNING

Do not remove the radiator cap when the engine is hot. This can allow coolant to blow out of the opening and cause serious burns.

6. If you cannot find the cause of the overheating, wait until the engine temperature has returned to normal. Then, if coolant has been lost, carefully add coolant to the reservoir to bring the fluid level in the reservoir up to the halfway mark.
7. Proceed with caution, keeping alert for further signs of overheating. If overheating happens again, call a professional workshop. Kia recommends to call an authorised Kia dealer/service partner.

⚠ CAUTION

- ***Serious loss of coolant indicates there is a leak in the cooling system. In this case, have the system checked by a professional workshop. Kia recommends to visit an authorised Kia dealer/service partner.***
- ***When the engine overheats from low engine coolant, suddenly adding engine coolant may cause cracks in the engine. To prevent damage, add engine coolant slowly in small quantities.***

IF YOU HAVE A FLAT TYRE (WITH SPARE TYRE, IF EQUIPPED)

Jack and tools

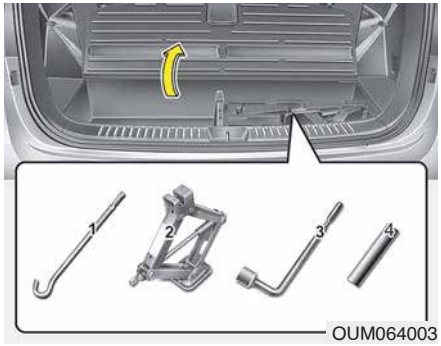

The jack, jack handle, wheel lug nut wrench are stored in the luggage compartment.

Pull up the luggage box cover to reach this equipment.

(1) Jack handle

(2) Jack

(3) Wheel lug nut wrench

(4) Socket

Jacking instructions

The jack is provided for emergency tyre changing only.

To prevent the jack from “rattling” whilst the vehicle is in motion, store it properly.

Follow jacking instructions to reduce the possibility of personal injury.

⚠ WARNING

Be cautious as the minimum ground clearance gets lower when you store the original tyre in the bottom of the vehicle after replacing it with a spare tyre.

In particular, drive below 30 km/h (18 mph) when driving over a speed bump and on uphill/downhill/uneven road.

⚠ WARNING - Changing tyres

- **Never attempt vehicle repairs in the traffic lanes of a public road or highway.**
- **Always move the vehicle completely off the road and onto the shoulder before trying to change a tyre. The jack should be used on firm level ground. If you cannot find a firm level place off the road, call a towing service company for assistance.**

(Continued)

(Continued)

- **Be sure to use the correct front and rear jacking positions on the vehicle; never use the bumpers or any other part of the vehicle for jacking support.**
- **The vehicle can roll off the jack causing serious injury or death.**
- **Do not get under a vehicle that is supported by a jack.**
- **Do not start or run the engine whilst the vehicle is on the jack.**
- **Do not allow anyone remain in the vehicle whilst it is on the jack.**
- **Make sure any children present are in a secure place away from the road and from the vehicle to be raised with the jack.**

Removing and storing the spare tyre

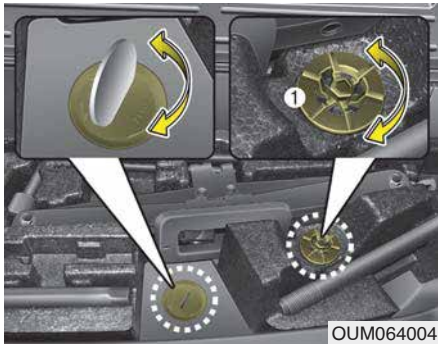

Your spare tyre is stored underneath your vehicle, directly below the cargo area.

To remove the spare tyre:

1. Open the tailgate.
2. Find the spare tyre fixing bolt cover and remove the cover.

   If necessary, separate the tool case only after removing the clamp (1).



3. Connect the socket and wheel lug nut wrench.
4. Use the wheel lug nut wrench to loosen the bolt enough to lower the spare tyre.

   Turn the wrench counterclockwise until the spare tyre reaches the ground.



OUM064006

5. After the spare tyre reaches the ground, continue to turn the wrench counterclockwise, and draw the spare tyre outside. Never rotate the wrench excessively, otherwise the spare tyre carrier may be damaged.
6. Remove the retainer (1) from the centre of the spare tyre.



OUM064007

To store the spare tyre:

1. Lay the tyre on the ground with the valve stem facing up.
2. Place the wheel under the vehicle and install the retainer (1) through the wheel centre.
3. Turn the wrench clockwise until it clicks.

⚠ WARNING

Ensure the spare tyre retainer is properly aligned with the centre of the spare tyre to prevent the spare tyre from "rattling".

Otherwise, it may cause the spare tyre to fall off the carrier and lead to an accident.

Changing tyres

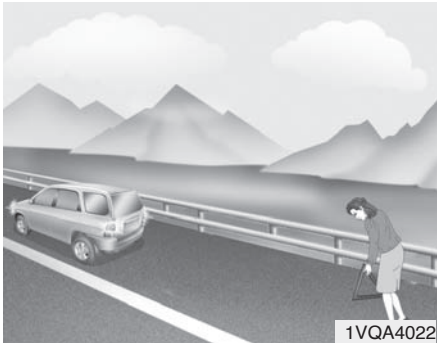

1. Park on a level surface and apply the parking brake firmly.
2. Shift the shift lever into R (Reverse) with manual transaxle or P (Park) with automatic transaxle.
3. Activate the hazard warning flasher.

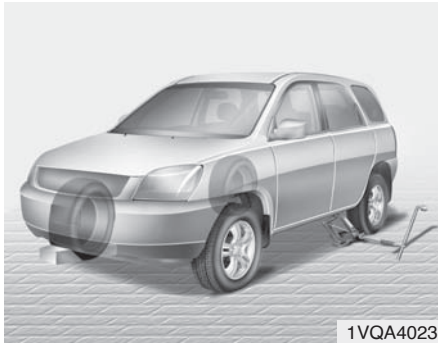

4. Remove the wheel lug nut wrench, jack, jack handle, and spare tyre from the vehicle.
5. Block both the front and rear of wheel that is diagonally opposite the jack position.

⚠ WARNING - Changing a tyre

- **To prevent vehicle movement whilst changing a tyre, always set the parking brake fully, and always block the wheel diagonally opposite the wheel being changed.**
- **We recommend that the wheels of the vehicle be chocked, and that no person remain in a vehicle that is being jacked.**



6. Loosen the wheel lug nuts counterclockwise one turn each, but do not remove any nut until the tyre has been raised off the ground.

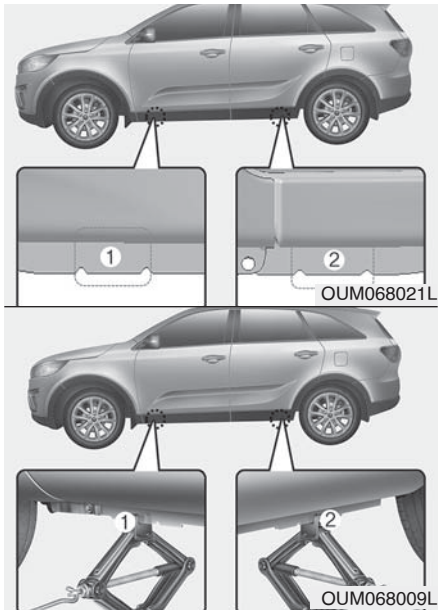

7. Place the jack at thefront(1) or rear(2) jacking position closest to the tyre you are changing. Place the jack at the designated locations under the frame. The jacking positions are plates welded to the frame with two tabs and a raised dot to index with the jack.

⚠ WARNING - Jack location

To reduce the possibility of injury, be sure to use only the jack provided with the vehicle and in the correct jack position; never use any other part of the vehicle for jack support.


OUM064010

8. Insert the jack handle into the jack and turn it clockwise, raising the vehicle until the tyre just clears the ground. This measurement is approximately 30 mm (1.2 in). Before removing the wheel lug nuts, make sure the vehicle is stable and that there is no chance for movement or slippage.

9. Loosen the wheel nuts and remove them with your fingers. Slide the wheel off the studs and lay it flat so it cannot roll away. To put the wheel on the hub, pick up the spare tyre, line up the holes with the studs and slide the wheel onto them.

   If this is difficult, tip the wheel slightly and get the top hole in the wheel lined up with the top stud. Then jiggle the wheel back and forth until the wheel can be slid over the other studs.

⚠ WARNING

Wheels may have sharp edges. Handle them carefully to avoid possible severe injury. Before putting the wheel into place, be sure that there is nothing on the hub or wheel (such as mud, tar, gravel, etc.) that interferes with the wheel from fitting solidly against the hub.

If there is, remove it. If there is not good contact on the mounting surface between the wheel and hub, the wheel nuts could come loose and cause the loss of a wheel. Loss of a wheel may result in loss of control of the vehicle. This may cause serious injury or death.

10. To reinstall the wheel, hold it on the studs, put the wheel nuts on the studs and tighten them finger tight. Jiggle the tyre to be sure it is completely seated, then tighten the nuts as much as possible with your fingers again.
11. Lower the vehicle to the ground by turning the wheel nut wrench counterclockwise.



OUM068011K

Then position the wrench as shown in the drawing and tighten the wheel nuts. Be sure the socket is seated completely over the nut. Do not stand on the wrench handle or use an extension pipe over the wrench handle. Go around the wheel tightening every other nut until they are all tight. Then double-check each nut for tightness. After changing wheels, have the system checked by a professional workshop. Kia recommends to visit an authorised Kia dealer/service partner.

Wheel nut tightening torque:

Steel wheel & aluminum alloy wheel:
9~11 kg·m (65~79 lb·ft)

If you have a tyre gauge, remove the valve cap and check the air pressure. If the pressure is lower than recommended, drive slowly to the nearest service station and inflate to the correct pressure. If it is too high, adjust it until it is correct. Always reinstall the valve cap after checking or adjusting tyre pressure. If the cap is not replaced, air may leak from the tyre. If you lose a valve cap, buy another and install it as soon as possible.

After you have changed wheels, always secure the flat tyre in its place and return the jack and tools to their proper storage locations.

⚠ CAUTION

Your vehicle has metric threads on the wheel studs and nuts. Make certain during wheel removal that the same nuts that were removed are reinstalled - or, if replaced, that nuts with metric threads and the same chamfer configuration are used. Installation of a non-metric thread nut on a metric stud or vice-versa will not secure the wheel to the hub properly and will damage the stud so that it must be replaced.

Note that most lug nuts do not have metric threads. Be sure to use extreme care in checking for thread style before installing aftermarket lug nuts or wheels.

If in doubt, consult a professional workshop. Kia recommends to consult an authorised Kia dealer/service partner.

⚠ WARNING - Wheel studs

If the studs are damaged, they may lose their ability to retain the wheel. This could lead to the loss of the wheel and a collision resulting in serious injuries.

To prevent the jack, jack handle, wheel lug nut wrench and spare tyre from rattling whilst the vehicle is in motion, store them properly.

⚠ WARNING - Inadequate spare tyre pressure

Check the inflation pressures as soon as possible after installing the spare tyre. Adjust it to the specified pressure, if necessary. Refer to "Tyres and wheels" in chapter 8.

Important - use of compact spare tyre (if equipped)

Your vehicle is equipped with a compact spare tyre. This compact spare tyre takes up less space than a regular-size tyre. This tyre is smaller than a conventional tyre and is designed for temporary use only.

⚠ CAUTION

- ***You should drive carefully when the compact spare is in use. The compact spare should be replaced by the proper conventional tyre and rim at the first opportunity.***
- ***The operation of this vehicle is not recommended with more than one compact spare tyre in use at the same time.***

⚠ WARNING

The compact spare tyre is for emergency use only. Do not operate your vehicle on this compact spare at the speed over 80 km/h (50 mph). The original tyre should be repaired or replaced as soon as possible to avoid failure of the spare possibly leading to personal injury or death.

The compact spare should be inflated to 420 kPa (60 psi).

✻ NOTICE

Check the inflation pressure after installing the spare tyre. Adjust it to the specified pressure, as necessary.

When using a compact spare tyre, observe the following precautions:

- Under no circumstances should you exceed 80 km/h (50 mph); a higher speed could damage the tyre.
- Ensure that you drive slowly enough to avoid all hazards. Any road hazard, such as a pothole or debris, could seriously damage the compact spare.
- Any continuous road use of this tyre could result in tyre failure, loss of vehicle control, and possible personal injury.
- Do not exceed the vehicle's maximum load rating or the load-carrying capacity shown on the sidewall of the compact spare tyre.
- Avoid driving over obstacles. The compact spare tyre diameter is smaller than the diameter of a conventional tyre and reduces the ground clearance approximately 2.5 cm (1 inch), which could result in damage to the vehicle.
- Do not take the vehicle through an automatic car wash whilst the compact spare tyre is installed.
- Do not use tyre chains on the temporary compact tyre. Because of the smaller size, a tyre chain will not fit properly. This could damage the vehicle and result in loss of the chain.
- Temporary compact tyre should not be installed on the front axle if the vehicle must be driven in snow or on ice.
- Do not use the temporary compact tyre on any other vehicle because this tyre has been designed especially for your vehicle.
- The temporary compact tyre tread life is shorter than a regular tyre. Inspect your temporary compact tyre regularly and replace worn compact spare tyres with the same size and design, mounted on the same wheel.
- The temporary compact tyre should not be used on any other wheels, nor should standard tyres, snow tyres, wheel covers or trim rings be used with the temporary compact spare wheel. If such use is attempted, damage to these items or other car components may occur.
- Do not use more than one temporary compact tyre at a time.
- Do not tow a trailer whilst the temporary compact tyre is installed.

Jack label

• Type B

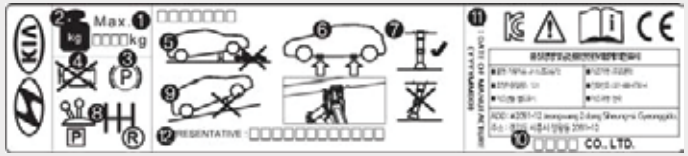

OHYK064005

❊ The actual Jack label in the vehicle may differ from the illustration.
For more detailed specifications, refer to the label attached to the jack.

1. Model Name
2. Maximum allowable load
3. When using the jack, set your parking brake.
4. When using the jack, stop the engine.
5. Do not get under a vehicle that is supported by a jack.
6. The designated locations under the frame
7. When supporting the vehicle, the base plate of jack must be vertical under the lifting point.
8. Shift into Reverse gear on vehicles with manual transmission or move the shift lever to the P position on vehicles with automatic transmission.
9. The jack should be used on firm level ground.
10. Jack manufacturer
11. Production date
12. Representative company and address

TOWING

Towing service

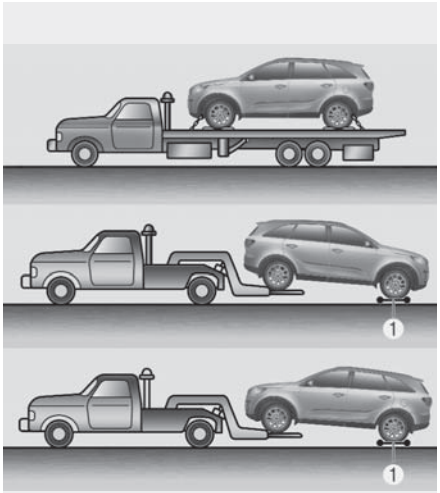

OUM066022L

If emergency towing is necessary, we recommend having it done by an authorised Kia dealer or a commercial tow-truck service. Proper lifting and towing procedures are necessary to prevent damage to the vehicle. The use of wheel dollies (1) or flatbed is recommended.

On AWD vehicles, your vehicle must be towed with a wheel lift and dollies or flatbed equipment with all the wheels off the ground.

⚠ CAUTION

The AWD vehicle should never be towed with the wheels on the ground. This can cause serious damage to the transaxle or the AWD system.

On FWD vehicles, it is acceptable to tow the vehicle with the rear wheels on the ground (without dollies) and the front wheels off the ground.

If any of the loaded wheels or suspension components are damaged or the vehicle is being towed with the front wheels on the ground, use a towing dolly under the front wheels.

When being towed by a commercial tow truck and wheel dollies are not used, the front of the vehicle should always be lifted, not the rear.

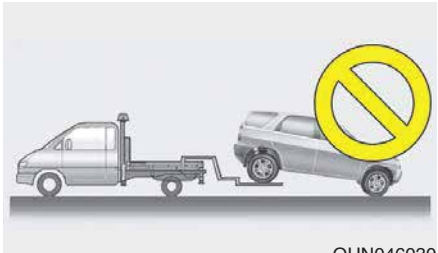

OUN046030

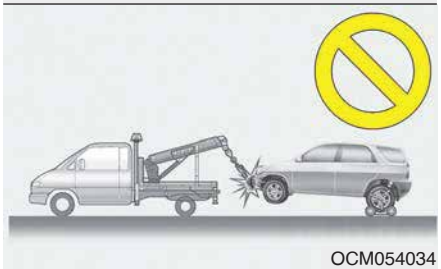

OCM054034

⚠ CAUTION

- ***Do not tow the vehicle backwards with the front wheels on the ground as this may cause damage to the vehicle.***
- ***Do not tow with sling-type equipment. Use wheel lift or flatbed equipment.***

When towing your vehicle in an emergency without wheel dollies :

1. Set the ignition switch in the ACC position.
2. Place the transaxle shift lever in N (Neutral).
3. Release the parking brake.

⚠ CAUTION

Failure to place the transaxle shift lever in N (Neutral) may cause internal damage to the transaxle.

Removable towing hook (if equipped)

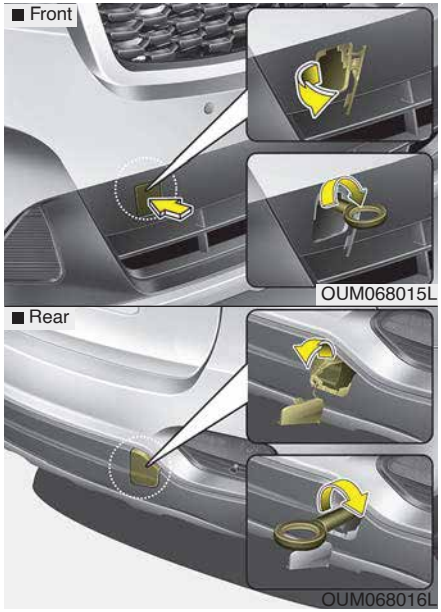

1. Open the tailgate, and remove the towing hook from the tool case.
2. Remove the hole cover pressing the lower part of the cover on the bumper.
3. Install the towing hook by turning it clockwise into the hole until it is fully secured.
4. Remove the towing hook and install the cover after use.

Emergency towing



If towing is necessary, we recommend you to have it done by an authorised Kia dealer or a commercial tow truck service.

If towing service is not available in an emergency, your vehicle may be temporarily towed using a cable or chain secured to the emergency towing hook under the front (or rear) of the vehicle. Use extreme caution when towing the vehicle. A driver must be in the vehicle to steer it and operate the brakes.

Towing in this manner may be done only on hard-surfaced roads for a short distance and at low speed. Also, the wheels, axles, power train, steering and brakes must all be in good condition.

- Do not use the tow hooks to pull a vehicle out of mud, sand or other conditions from which the vehicle cannot be driven out under its own power.
- Avoid towing a vehicle heavier than the vehicle doing the towing.
- The drivers of both vehicles should communicate with each other frequently.

⚠ CAUTION

- ***Attach a towing strap to the tow hook.***
- ***Using a portion of the vehicle other than the tow hooks for towing may damage the body of your vehicle.***
- ***Use only a cable or chain specifically intended for use in towing vehicles. Securely fasten the cable or chain to the towing hook provided.***
- ***Accelerate or decelerate the vehicle in a slow and gradual manner while maintaining tension on the tow rope or chain to start or drive the vehicle, otherwise tow hooks and the vehicle may be damaged.***

- Before emergency towing, check if the hook is not broken or damaged.
- Fasten the towing cable or chain securely to the hook.
- Do not jerk the hook. Apply it steadily and with even force.
- To avoid damaging the hook, do not pull from the side or at a vertical angle. Always pull straight ahead.

⚠ WARNING

Use extreme caution when towing the vehicle.

- **Avoid sudden starts or erratic driving manoeuvre which would place excessive stress on the emergency towing hook and towing cable or chain. The hook and towing cable or chain may break and cause serious injury or damage.**
- **If the disabled vehicle is unable to be moved, do not forcibly continue the towing. We recommend that you contact an authorised Kia dealer or a commercial tow truck service for assistance.**
- **Tow the vehicle as straight ahead as possible.**
- **Keep away from the vehicle during towing.**

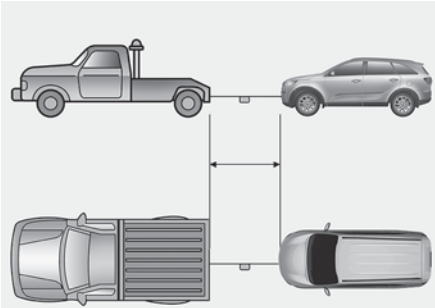

OUM064014

- Use a towing strap less than 5 m (16 feet) long. Attach a white or red cloth (about 30 cm (12 inches) wide) in the middle of the strap for easy visibility.
- Drive carefully so that the towing strap is not loosened during towing.
- The driver must be in the vehicle for steering and braking operations when the vehicle is towed and passengers other than the driver must not be allowed to be on board.

Emergency towing precautions

- Turn the ignition switch to ACC so the steering wheel isn't locked.
- Place the transaxle shift lever in N (Neutral).
- Release the parking bake.
- Press the brake pedal with more force than normal since you will have reduced brake performance.
- More steering effort will be required because the power steering system will be disabled.
- If you are driving down a long hill, the brakes may overheat and brake performance will be reduced. Stop often and let the brakes cool off.
- The vehicle should be towed at a speed of 25km/h or less within the distance of 20km.

⚠ CAUTION - Automatic transaxle

- ***If the car is being towed with all four wheels on the ground, it can be towed only from the front. Be sure that the transaxle is in neutral. Be sure the steering is unlocked by placing the ignition switch in the ACC position. A driver must be in the towed vehicle to operate the steering and brakes.***
- ***To avoid serious damage to the automatic transaxle, limit the vehicle speed to 15 km/h (10 mph) and drive less than 1.5 km (1 mile) when towing.***
- ***Before towing, check the automatic transaxle for fluid leaks under your vehicle. If the automatic transaxle fluid is leaking, flatbed equipment or a towing dolly must be used.***

Maintenance

Engine compartment 8-4
Maintenance services 8-6
• Owner's responsibility 8-6
• Owner maintenance precautions 8-6
Owner maintenance 8-9
• Owner maintenance schedule 8-9
Scheduled maintenance service 8-11
• Scheduled maintenanceservice precaution 8-12
Explanation of scheduled maintenance items . . . 8-17
Engine oil (Petrol). 8-21
• Checking the engine oil level 8-21
• Changing the engine oil and filter 8-22
Engine coolant 8-23
• Changing the coolant 8-23
Brake/clutch fluid 8-26
• Checking the brake/clutch fluid level 8-26
Washer fluid 8-27
• Checking the washer fluid level 8-27
Air cleaner. 8-28
• Filter replacement 8-28
Climate control air filter 8-30
• Filter inspection. 8-30
Wiper blades 8-32
• Blade inspection. 8-32
• Blade replacement 8-32
Battery 8-36
• For best battery servi ce 8-36
• Battery capacity label 8-38
• Battery recharging 8-39
• Reset items 8-39
Tyres and wheels 8-40
• Tyre care 8-40
• Recommended cold tyre inflation pressures 8-40
• Checking tyre inflation pressure 8-41
• Tyre rotation 8-42
• Wheel alignment and tyre balance 8-43
• Tyre replacement. 8-44
• Wheel replacement 8-45
• Tyre traction 8-46
• Tyre maintenance 8-46
• Tyre sidewall labeling 8-46
• Low aspect ratio tyre 8-50
Fuses 8-51
• Inner panel fuse replacement. 8-53
• Engine compartment fuse replacement. 8-54
• Fuse/relay panel description. 8-57

Light bulbs 8-69
• Light bulb position (Front). 8-71
• Light bulb position (Rear) 8-72
• Light bulb position (Side). 8-73
• Headlamp (Low beam) bulb replacement 8-73
• Headlamp (High beam) bulb replacement 8-73
• Front turn signal lamp bulb replacement 8-73
• Side repeater lamp (LED type) bulb replacement. . . 8-73
• Front fog lamp bulb replacement. 8-85
• Stop and tail lamp (Bulb type) bulb replacement. . . 8-70
• Rear turn signal lamp (Bulb type) bulb replacement. 8-75
• Tail lamp (inside) (Bulb type) bulb replacement. . . 8-76
• Back up lamp (Bulb type) bulb replacement. 8-77
• Stop and tail lamp (LED type) bulb replacement. . . 8-78
• Rear fog lamp bulb replacement. 8-78
• High mounted stop lamp bulb replacement. 8-79
• License plate lamp bulb replacement. 8-79
• Door courtesy lamp bulb replacement. 8-80
• Map lamp (Bulb type) bulb replacement. 8-80
• Map lamp (LED type) bulb replacement. 8-81
• Room lamp bulb replacement. 8-81
• Personal lamp (LED type) bulb replacement. 8-82
• Glove box lamp replacement. 8-82
• Luggage lamp bulb replacement. 8-83
• Vanity mirror lamp bulb replacement. 8-83
• Headlight and front fog light aiming (for Europe). 8-84
Appearance care. 8-91
• Exterior care. 8-91
• Interior care. 8-97
Emission control system. 8-100
• Crankcase emission control system. 8-100
• Evaporative emission control system. 8-100
• Exhaust emission control system 8-101

ENGINE COMPARTMENT

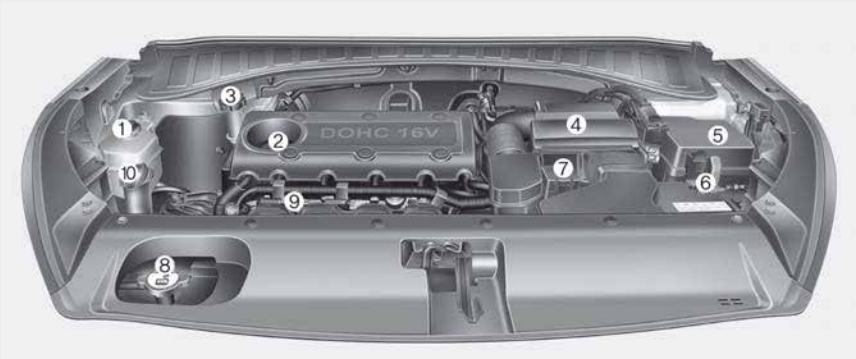

1. Engine coolant reservoir
2. Engine oil filler cap
3. Brake/clutch fluid reservoir (if equipped)
4. Air cleaner
5. Fuse box
6. Negative battery terminal
7. Positive battery terminal
8. Radiator cap
9. Engine oil dipstick
10. Windscreen washer fluid reservoir

The actual engine room in the vehicle may differ from the illustration.

OUM076100R/OUM076101R

■ **Petrol Engine (Lambda II 3.5L) - MPI**



1. Engine coolant reservoir
2. Engine oil filler cap
3. Brake/clutch fluid reservoir (if equipped)
4. Air cleaner
5. Fuse box
6. Negative battery terminal
7. Positive battery terminal
8. Radiator cap
9. Engine oil dipstick
10. Windscreen washer fluid reservoir

The actual engine room in the vehicle may differ from the illustration.

OUM076105R/OUM078001R

MAINTENANCE SERVICES

You should exercise the utmost care to prevent damage to your vehicle and injury to yourself whenever performing any maintenance or inspection procedures.

Inadequate, incomplete or insufficient servicing may result in operational problems with your vehicle that could lead to vehicle damage, an accident, or personal injury.

Owner's responsibility

✻ NOTICE

Maintenance Service and Record Retention are the owner's responsibility.

Have your vehicle serviced by a professional workshop. Kia recommends to visit an authorised Kia dealer/service partner.

You should retain documents that show proper maintenance has been performed on your vehicle in accordance with the scheduled maintenance service charts shown on the following pages.

You need this information to establish your compliance with the servicing and maintenance requirements of your vehicle warranties.

Detailed warranty information is provided in your Warranty & Maintenance book.

Repairs and adjustments required as a result of improper maintenance or a lack of required maintenance are not covered when your vehicle is covered by warranty.

Owner maintenance precautions

Improper or incomplete service may result in problems. This section gives instructions only for the maintenance items that are easy to perform.

✻ NOTICE

Improper owner maintenance during the warranty period may affect warranty coverage. For details, read the separate Warranty & Maintenance book provided with the vehicle. If you're unsure about any servicing or maintenance procedure, have the system serviced by a professional workshop. Kia recommends to visit an authorised Kia dealer/service partner.

⚠ WARNING - Maintenance work

- **Performing maintenance work on a vehicle can be dangerous. You can be seriously injured whilst performing some maintenance procedures. If you lack sufficient knowledge and experience or the proper tools and equipment to do the work, have the system serviced by a professional workshop. Kia recommends to visit an authorised Kia dealer/service partner.**

(Continued)

(Continued)

- **Working under the bonnet with the engine running is dangerous. It becomes even more dangerous when you wear jewelry or loose clothing. These can become entangled in moving parts and result in injury. Therefore, if you must run the engine whilst working under the bonnet, make certain that you remove all jewelry (especially rings, bracelets, watches, and necklaces) and all neckties, scarves, and similar loose clothing before getting near the engine or cooling fans.**

⚠ CAUTION

- ***Do not put heavy objects or apply excessive force on top of the engine cover (if equipped) or fuel related parts.***
- ***When you inspect the fuel system (fuel lines and fuel injection devices), contact a professional workshop. Kia recommends to visit an authorised Kia dealer/service partner.***
- ***Do not drive long time with the engine cover (if equipped) removed.***
- ***When checking the engine room, do not go near fire. Fuel, washer fluid, etc. are flammable oils that may cause fire.***
- ***Before touching the battery, ignition cables and electrical wiring, you should disconnect the battery "-" terminal. You may get an electric shock from the electric current.***

(Continued)

(Continued)

- ***When you remove the interior trim cover with a flat bed (-) driver, be careful not to damage the cover.***
- ***Be careful when you replace and clean bulbs to avoid burns or electrical shock.***

OWNER MAINTENANCE

The following lists are vehicle checks and inspections that should be performed at the frequencies indicated to help ensure safe, dependable operation of your vehicle.

If you have any question, consult a professional workshop. Kia recommends to consult an authorised Kia dealer/service partner.

These Owner Maintenance Checks are generally not covered by warranties and you may be charged for labour, parts and lubricants used.

Owner maintenance schedule

When you stop for fuel:

- Check the engine oil level.
- Check the coolant level in the coolant reservoir.
- Check the windscreen washer fluid level.
- Look for low or under-inflated tyres.

⚠ WARNING

Be careful when checking your engine coolant level when the engine is hot. Scalding hot coolant and steam may blow out under pressure. This could cause burns or other serious injury.

Whilst operating your vehicle:

- Note any changes in the sound of the exhaust or any smell of exhaust fumes in the vehicle.
- Check for vibrations in the steering wheel. Notice any increased steering effort or looseness in the steering wheel, or change in its straight-ahead position.
- Notice if your vehicle constantly turns slightly or “pulls” to one side when travelling on smooth, level road.
- When stopping, listen and check for unusual sounds, pulling to one side, increased brake pedal travel or “hard-to-push” brake pedal.
- If any slipping or changes in the operation of your transaxle occurs, check the transaxle fluid level.
- Check the automatic transaxle P (Park) function.
- Check the parking brake.
- Check for fluid leaks under your vehicle (water dripping from the air conditioning system during or after use is normal).

At least monthly:

- Check the coolant level in the engine coolant reservoir.
- Check the operation of all exterior lights, including the stoplights, turn signals and hazard warning flashers.
- Check the inflation pressures of all tyres including the spare for tyres that are worn, show uneven wear, or are damaged.
- Check for loose wheel lug nuts.

At least twice a year (i.e., every Spring and Fall):

- Check the radiator, heater and air conditioning hoses for leaks or damage.
- Check the windscreen washer spray and wiper operation. Clean the wiper blades with clean cloth dampened with washer fluid.
- Check the headlight alignment.
- Check the muffler, exhaust pipes, shields and clamps.
- Check the lap/shoulder belts for wear and function.

At least once a year:

- Clean the body and door drain holes.
- Lubricate the door hinges and checks, and bonnet hinges.
- Lubricate the door and bonnet locks and latches.
- Lubricate the door rubber weatherstrips.
- Check the air conditioning system.
- Check the power steering fluid level.
- Inspect and lubricate the automatic transaxle linkage and controls.
- Clean the battery and terminals.
- Check the brake/clutch fluid level.

SCHEDULED MAINTENANCE SERVICE

Scheduled maintenance service precaution

Follow the Normal Maintenance Schedule if the vehicle is usually operated where none of the following conditions apply. If any of the following conditions apply, follow the Maintenance Under Severe Usage Conditions.

- Repeated driving short distance of less than 8 km (5 miles) in normal temperature or less than 16 km(10 miles) in freezing temperature
- Extensive engine idling or low speed driving for long distances
- Driving on rough, dusty, muddy, unpaved, graveled or salt-spread roads
- Driving in areas using salt or other corrosive materials or in very cold weather
- Driving in heavy dust condition
- Driving in heavy traffic area
- Driving on uphill, downhill, or mountain road repeatedly
- Towing a trailer or using a camper, or roof rack
- Driving as a patrol car, taxi, other commercial use of vehicle towing
- Driving over 170 km/h (106 mile/h)
- Frequently driving in stop-and-go condition

If your vehicle is operated under the above conditions, you should inspect, replace or refill more frequently than the following Normal Maintenance Schedule. After the periods or distance shown in the chart, continue to follow the prescribed maintenance intervals.

Normal Maintenance Schedule

The following maintenance services must be performed to ensure good emission control and performance. Keep receipts for all vehicle emission services to protect your warranty. Where both mileage and time are shown, the frequency of service is determined by whichever occurs first.

NO.	ITEM	REMARK
*1	Engine oil and engine oil filter	Check the engine oil level and leak every 500 km (350 miles) or before starting a long trip.
*3	Coolant (Engine)	When adding coolant, use only deionized water or soft water for your vehicle and never mix hard water in the coolant filled at the factory. An improper coolant mixture can result in serious malfunction or engine damage.
*4	Drive belts (Engine)	• Adjust alternator, water pump and air conditioner drive belt. Inspect and if necessary repair or replace. • Inspect drive belt tensioner, idler and alternator pulley and if necessary correct or replace.
*5	Valve clearance	Inspect for excessive valve noise and/or engine vibration and adjust if necessary. In this case, have the system checked by a professional workshop. Kia recommends to visit an authorised Kia dealer/service partner.
*6	Spark plug	For your convenience, it can be replaced prior to it's interval when you do maintenance of other items.
*8	Differential oil (rear)	Differential oil should be changed anytime it has been submerged in water.
*9	Transfer case oil (AWD)	Transfer case oil should be changed anytime it has been submerged in water.

Maintenance Intervals / Maintenance Items	NORMAL MAINTENANCE SCHEDULE																			
	Number of months or driving distance, whichever comes first																			
	Months	3	6	9	12	15	18	21	24	27	30	33	36	39	42	45	48	51	54	57	60
	Km X 1000	5	10	15	20	25	30	35	40	45	50	55	60	65	70	75	80	85	90	95	100
Engine Oil & Engine Oil Filter		R	R	R	R	R	R	R	R	R	R	R	R	R	R	R	R	R	R	R	R
Coolant (Engine)	At First, Replace at 210,000 Km after that, Replace every 30,000Km																				
Drive Belts (Engine)		I	I	I	I	I	I	I	I	I	I	I	I	I	I	I	I	I	I	I	I
Vaccum Hoses and crankcase ventilation hoses			I		I		I		I		I		I		I		I		I		I
Spark Plug			I		I		I		R		I		I		I		R		I		I
Automatic transaxle fluid	No Check, No Service Require																				
Drive Shaft and boots		I	I	I	I	I	I	I	I	I	I	I	I	I	I	I	I	I	I	I	I
Propeller shaft		I	I	I	I	I	I	I	I	I	I	I	I	I	I	I	I	I	I	I	I
Differential oil (rear) (AWD)													I								I
Transfer case oil (AWD)													I								I
Fuel Filter													R								
Fuel lines, hoses and connections			I		I		I		I		I		I		I		I		I		I
Fuel tank air filter										R									R		
Vapor hose and fuel filler cap			I		I		I		I		I		I		I		I		I		I

I : Inspect and if necessary, adjust, correct, clean or replace. R : Replace or change.

Maintenance Intervals / Maintenance Items	NORMAL MAINTENANCE SCHEDULE																				
	Number of months or driving distance, whichever comes first																				
	Months	3	6	9	12	15	18	21	24	27	30	33	36	39	42	45	48	51	54	57	60
	Km X 1000	5	10	15	20	25	30	35	40	45	50	55	60	65	70	75	80	85	90	95	100
Air Cleaner filter			I	R		I	R		I	R		I	R		I	R		I	R		I
Exhaust System			I		I		I		I		I		I		I		I		I		I
Cooling System			I		I		I		I		I		I		I		I		I		I
Air conditioner compressor/refrigerant	I	I	I	I	I	I	I	I	I	I	I	I	I	I	I	I	I	I	I	I	I
Climate control air filter		I	R		I	R		I	R		I	R		I	R		I	R		I
Brake pads		I		I		I		R		I		I		I		R		I		I
Brake Disc		I		I		I		I		I		I		I		I				I
Brake lines, hoses and connections		I		I		I		I		I		I		I		I		I		I
Brake fluid	I	I	I	I	I	I	I	I	I	I	I	I	I	I	I	I	I	I	I	I	I
Steering gear rack, linkage and boots	I	I	I	I	I	I	I	I	I	I	I	I	I	I	I	I	I	I	I	I	I
Suspension ball joints	I	I	I	I	I	I	I	I	I	I	I	I	I	I	I	I	I	I	I	I	I
Tyre (pressure & tread wear)	I	I	I	I	I	I	I	I	I	I	I	I	I	I	I	I	I	I	I	I	I
Tyre Rotation			I			I			I				I			I			I		
Battery (12V) condition	I	I	I	I	I	I	I	I	I	I	I	I	I	I	I	I	I	I	I	I	I

I : Inspect and if necessary, adjust, correct, clean or replace. R : Replace or change.

MAINTENANCE ITEM	MAINTENANCE OPERATION	MAINTENANCE INTERVALS	DRIVING CONDITION
Engine Oil & Engine Oil Filter	R	Replace more frequently depending on the condition	A, B, C, D, E, F, G, H, I, J, K
Spark plugs	R	Replace more frequently depending on the condition	B, H, I, K
Automatic transaxle fluid	R	Every 90,000 km (60,000 miles)	A, C, D, E, F, G, H, I, J
Drive shaft and boots	I	Inspect more frequently depending on the condition	C, D, E, F, G, H, I, J
Propeller shaft	I	Inspect more frequently depending on the condition	C, D, E, F, G, H, I, J
Differential oil (rear) (AWD)	R	Every 120,000 km (80,000 miles)	C, E, G, H, I, J
Transfer case oil (AWD)	R	Every 120,000 km (80,000 miles)	C, E, G, H, I, J
Air cleaner filter	R	Replace more frequently depending on the condition	C, E
Climate control air filter	R	Replace more frequently depending on the condition	C, E, G
Brake discs and pads, calipers and rotors	I	Inspect more frequently depending on the condition	C, D, E, G, H
Steering gear rack, linkage and boots	I	Inspect more frequently depending on the condition	C, D, E, F, G
Suspension ball joints	I	Inspect more frequently depending on the condition	C, D, E, F, G

Maintenance operation
I : Inspect and if necessary, adjust, correct, clean or replace. R : Replace or change.

SEVERE DRIVING CONDITIONS

A : Repeatedly driving short distance of less than 8 km (5miles) in normal temperature or less than 16 km (10 miles) in freezing temperature.
B : Extensive engine idling or low speed driving for long distances.
C : Driving on rough, dusty, muddy, unpaved, graveled or salt-spread roads.
D : Driving in areas using salt or other corrosive materials or in very cold weather
E : Driving in heavy dust condition.
F : Driving in heavy traffic area.
G : Driving on uphill, downhill, or mountain roads repeatedly.
H : Towing a trailer or using a camper on roof rack.
I : Driving for patrol car, taxi, other commercial use of vehicle towing.
J : Driving over 170 km/h (106 mile/h).
K : Frequently driving in stop-and-go conditions.

EXPLANATION OF SCHEDULED MAINTENANCE ITEMS

Engine oil and filter

The engine oil and filter should be changed at the intervals specified in the maintenance schedule. If the vehicle is being driven in severe conditions, more frequent oil and filter changes are required.

Drive belts

Inspect all drive belts for evidence of cuts, cracks, excessive wear or oil saturation and replace if necessary. Drive belts should be checked periodically for proper tension and adjusted as necessary.

⚠ CAUTION

When you are inspecting the belt, place the ignition switch in the LOCK/OFF or ACC position.

Fuel filter (for petrol)

Kia petrol vehicle is equipped a lifetime fuel filter that integrated with the fuel tank. Regular maintenance or replacement is not needed but depends on fuel quality. If there are some important safety matters like fuel flow restriction, surging, loss of power, hard starting problem etc, fuel filter inspection or replace is needed. Have the fuel filter inspected or replaced by a professional workshop. Kia recommends to visit an authorised Kia dealer/service partner.

Fuel lines, fuel hoses and connections

Check the fuel lines, fuel hoses and connections for leakage and damage. Have the fuel lines, fuel hoses and connections replaced by a professional workshop. Kia recommends to visit an authorised Kia dealer/service partner.

Vapour hose and fuel filler cap

The vapour hose and fuel filler cap should be inspected at those intervals specified in the maintenance schedule. Make sure that a new vapour hose or fuel filler cap is correctly replaced.

Vacuum crankcase ventilation hoses (if equipped)

Inspect the surface of hoses for evidence of heat and/or mechanical damage. Hard and brittle rubber, cracking, tears, cuts, abrasions, and excessive swelling indicate deterioration. Particular attention should be paid to examine those hose surfaces nearest to high heat sources, such as the exhaust manifold.
Inspect the hose routing to assure that the hoses do not come in contact with any heat source, sharp edges or moving component which might cause heat damage or mechanical wear. Inspect all hose connections, such as clamps and couplings, to make sure they are secure, and that no leaks are present. Hoses should be replaced immediately if there is any evidence of deterioration or damage.

Air cleaner filter

Have the air cleaner filter replaced by a professional workshop. Kia recommends to visit an authorised Kia dealer/service partner.

Spark plugs (for petrol engine)

Make sure to install new spark plugs of the correct heat range.

⚠ WARNING

Do not disconnect and inspect spark plugs when the engine is hot. You may burn yourself.

Valve clearance (for petrol engine)

Inspect for excessive valve noise and/or engine vibration and adjust if necessary. In this case, have the system serviced by a professional workshop. Kia recommends to visit an authorised Kia dealer/service partner.

Cooling system

Check the cooling system components, such as the radiator, coolant reservoir, hoses and connections for leakage and damage. Replace any damaged parts.

Coolant

The coolant should be changed at the intervals specified in the maintenance schedule.

Automatic transaxle fluid (if equipped)

Automatic transaxle fluid should not be checked under normal usage conditions.
Have the automatic transmission fluid changed by a professional workshop according to the maintenance schedule. Kia recommends to visit an authorised Kia dealer/service partner.

✻ NOTICE

Automatic transaxle fluid colour is basically red.
As the vehicle is driven, the automatic transaxle fluid will begin to look darker. It is normal condition and you should not judge the need to replace the fluid based upon the changed colour.

⚠ CAUTION

The use of a non-specified fluid could result in transaxle malfunction and failure.

Use only specified automatic transaxle fluid. (Refer to "Recommended lubricants and capacities" in section 9.)

Brake hoses and lines

Visually check for proper installation, chafing, cracks, deterioration and any leakage. Replace any deteriorated or damaged parts immediately.

Brake/Clutch fluid (if equipped)

Check the brake/clutch fluid level in the brake/clutch fluid reservoir. The level should be between "MIN" and "MAX" marks on the side of the reservoir. Use only hydraulic brake/clutch fluid conforming to DOT 3 or DOT 4 specification.

Parking brake

Inspect the parking brake system including the parking brake lever (or pedal) and cables.

Brake discs, pads, calipers and rotors

Check the pads for excessive wear, discs for run out and wear, and calipers for fluid leakage.

For more information on checking the pads or lining wear limit, we recommend to refer to the Kia web site.

(**http://www.kia-hotline.com**)

Suspension mounting bolts

Check the suspension connections for looseness or damage. Retighten to the specified torque.

Steering gear box, linkage & boots/lower arm ball joint

With the vehicle stopped and engine off, check for excessive free-play in the steering wheel.

Check the linkage for bends or damage. Check the dust boots and ball joints for deterioration, cracks, or damage. Replace any damaged parts.

Power steering pump, belt and hoses

Check the power steering pump and hoses for leakage and damage. Replace any damaged or leaking parts immediately. Inspect the power steering belt (or drive belt) for evidence of cuts, cracks, excessive wear, oiliness and proper tension. Replace or adjust it if necessary.

Drive shafts and boots

Check the drive shafts, boots and clamps for cracks, deterioration, or damage. Replace any damaged parts and, if necessary, repack the grease.

Air conditioning refrigerant (if equipped)

Check the air conditioning lines and connections for leakage and damage.

ENGINE OIL (PETROL)

Checking the engine oil level

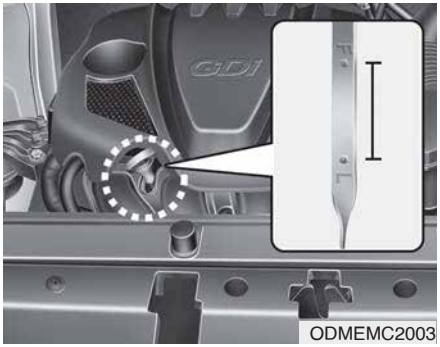

1. Be sure the vehicle is on level ground.
2. Start the engine and allow it to reach normal operating temperature.
3. Turn the engine off and wait for a few minutes (about 5 minutes) for the oil to return to the oil pan.
4. Pull the dipstick out, wipe it clean, and re-insert it fully.

⚠ WARNING - Radiator hose

Be very careful not to touch the radiator hose when checking or adding the engine oil as it may be hot enough to burn you.

5. Pull the dipstick out again and check the level. The level should be between F and L.

⚠ CAUTION

- ***Do not overfill the engine oil. It may damage the engine.***
- ***Do not spill engine oil, when adding or changing engine oil. If you drop the engine oil on the engine room, wipe it off immediately.***
- ***When you wipe the oil level gauge, you should wipe it with a clean cloth. When mixed with debris, it can cause engine damage.***

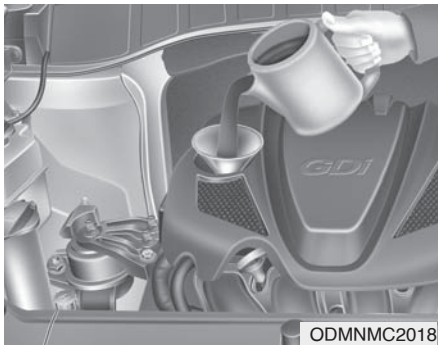

If it is near or at L, add enough oil to bring the level to F. **Do not overfill.**

Use a funnel to help prevent oil from being spilled on engine components.

Use only the specified engine oil. (Refer to "Recommended lubricants and capacities" in section 9.)

Changing the engine oil and filter

Have the engine oil and filter replaced by a professional workshop. Kia recommends to visit an authorised Kia dealer/service partner.

⚠ WARNING

Used engine oil may cause skin irritation or cancer if left in contact with the skin for prolonged periods of time. Used engine oil contains chemicals that have caused cancer in laboratory animals. Always protect your skin by washing your hands thoroughly with soap and warm water as soon as possible after handling used oil.

ENGINE COOLANT

The high-pressure cooling system has a reservoir filled with year round antifreeze coolant. The reservoir is filled at the factory.

Check the antifreeze protection and coolant level at least once a year, at the beginning of the winter season, and before travelling to a colder climate.

⚠ CAUTION

- ***When the engine overheats from low engine coolant, suddenly adding engine coolant may cause cracks in the engine. To prevent damage, add engine coolant slowly in small quantities.***
- ***Do not drive with no engine coolant. It may cause water pump failure and engine seizure, etc.***

Checking the coolant level

⚠ WARNING



Removing radiator cap

- **Never attempt to remove the radiator cap whilst the engine is operating or hot. Doing so might lead to cooling system and engine damage. Also, hot coolant or steam could cause serious personal injury.**
- **Turn the engine off and wait until it cools down. Use extreme care when removing the radiator cap. Wrap a thick towel around it, and turn it counterclockwise slowly to the first stop. Step back whilst the pressure is released from the cooling system.**

(Continued)

(Continued)

When you are sure all the pressure has been released, press down on the cap, using a thick towel, and continue turning counterclockwise to remove it.

- **Even if the engine is not operating, do not remove the radiator cap or the drain plug whilst the engine and radiator are hot. Hot coolant and steam may still blow out under pressure, causing serious injury.**

⚠ WARNING



The electric motor (cooling fan) is controlled by engine coolant temperature, refrigerant pressure and vehicle speed. It may sometimes operate even when the engine is not running. Use extreme caution when working near the blades of the cooling fan so that you are not injured by a rotating fan blades. As the engine coolant temperature decreases, the electric motor will automatically shut off. This is a normal condition.

If your vehicle is equipped with GDI, the electric motor (cooling fan) may operate until you disconnect the negative battery cable.

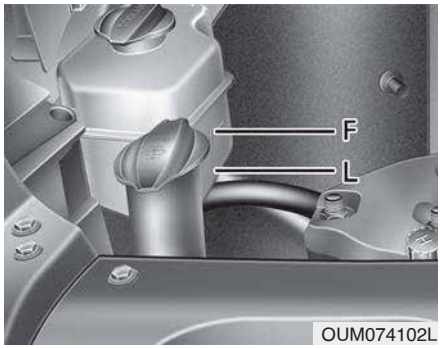

Check the condition and connections of all cooling system hoses and heater hoses. Replace any swollen or deteriorated hoses.

The coolant level should be filled between F and L marks on the side of the coolant reservoir when the engine is cool.

If the coolant level is low, add enough specified coolant to provide protection against freezing and corrosion. Bring the level to F, but do not overfill. If frequent additions are required, have the system inspected by a professional workshop. Kia recommends to visit an authorised Kia dealer/service partner.

Recommended engine coolant

- When adding coolant, use only deionized water or soft water for your vehicle and never mix hard water in the coolant filled at the factory. An improper coolant mixture can result in serious malfunction or engine damage.
- The engine in your vehicle has aluminum engine parts and must be protected by an ethylene-glycol-based coolant to prevent corrosion and freezing.
- DO NOT USE alcohol or methanol coolant or mix them with the specified coolant.
- Do not use a solution that contains more than 60% antifreeze or less than 35% antifreeze, which would reduce the effectiveness of the solution.

For mixture percentage, refer to the following table.

Ambient Temperature	Mixture Percentage (volume)	
	Antifreeze	Water
-15°C (5°F)	35	65
-25°C (-13°F)	40	60
-35°C (-31°F)	50	50
-45°C (-49°F)	60	40

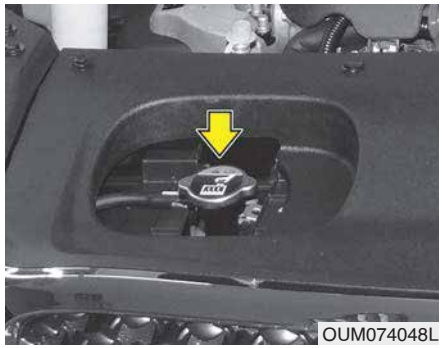
OUM074048L

⚠ WARNING



Radiator cap

Do not remove the radiator cap when the engine and radiator are hot. Scalding hot coolant and steam may blow out under pressure causing serious injury.

Changing the coolant

Have the coolant replaced by a professional workshop. Kia recommends to visit an authorised Kia dealer/service partner.

⚠ CAUTION

Put a thick cloth around the radiator cap before refilling the coolant in order to prevent the coolant from overflowing into engine parts such as the alternator.

⚠ WARNING - Coolant

- **Do not use radiator coolant or antifreeze in the washer fluid reservoir.**
- **Radiator coolant can severely obscure visibility when sprayed on the windscreen and may cause loss of vehicle control or damage the paint and body trim.**

BRAKE/CLUTCH FLUID (IF EQUIPPED)

Checking the brake/clutch fluid level

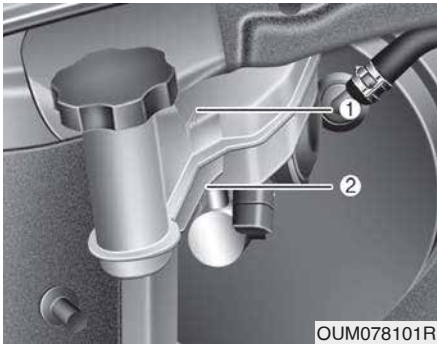

Check the fluid level in the reservoir periodically. The fluid level should be between MAX (1) and MIN (2) marks on the side of the reservoir.

Before removing the reservoir cap and adding brake/clutch fluid, clean the area around the reservoir cap thoroughly to prevent brake/clutch fluid contamination.

If the level is low, add fluid to the MAX level. The level will fall with accumulated mileage. This is a normal condition associated with the wear of the brake linings.

If the fluid level is excessively low, have the system checked by a professional workshop. Kia recommends to visit an authorised Kia dealer/service partner.

Use only the specified brake fluid. (Refer to "Recommended lubricants or capacities" in section 9.)

Never mix different types of fluid.

⚠ WARNING - Loss of brake/clutch fluid

In the event the brake/clutch system requires frequent additions of fluid, have the system Inspected by a professional workshop. Kia recommends to visit an authorised Kia dealer/service partner.

⚠ WARNING - Brake/ clutch fluid

When changing and adding brake/clutch fluid, handle it carefully. Do not let it come in contact with your eyes. If brake/clutch fluid should come in contact with your eyes, immediately flush them with a large quantity of fresh tap water. Have your eyes examined by a doctor as soon as possible.

⚠ CAUTION

Do not allow brake/clutch fluid to contact the vehicle's body paint, as paint damage will result. Brake/clutch fluid, which has been exposed to open air for an extended time should never be used as its quality cannot be guaranteed. It should be properly disposed. Don't put in the wrong kind of fluid. A few drops of mineral-based oil, such as engine oil, in your brake/clutch system can damage brake/clutch system parts.

WASHER FLUID

Checking the washer fluid level

■ Type A

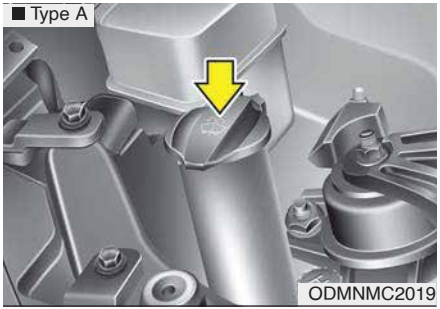

The reservoir is translucent so that you can check the level with a quick visual inspection.

Check the fluid level in the washer fluid reservoir and add fluid if necessary. Plain water may be used if washer fluid is not available. However, use washer solvent with antifreeze characteristics in cold climates to prevent freezing.

⚠ WARNING - Coolant

- **Do not use radiator coolant or antifreeze in the washer fluid reservoir.**
- **Radiator coolant can severely obscure visibility when sprayed on the windscreen and may cause loss of vehicle control or damage to paint and body trim.**
- **Windscreen Washer fluid agents contain some amounts of alcohol and can be flammable under certain circumstances. Do not allow sparks or flame to contact the washer fluid or the washer fluid reservoir. Damage to the vehicle or occupants could occur.**
- **Windscreen washer fluid is poisonous to humans and animals. Do not drink and avoid contacting windscreen washer fluid. Serious injury or death could occur.**

AIR CLEANER

Filter replacement

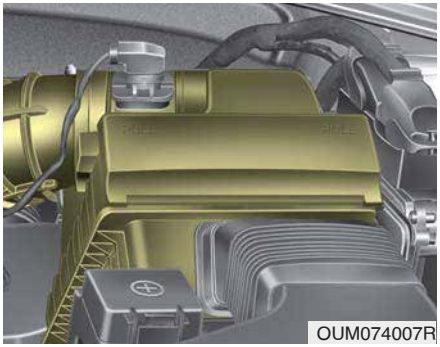

It must be replaced when necessary, and should not be washed.

You can clean the filter when inspecting the air cleaner element.

Clean the filter by using compressed air.

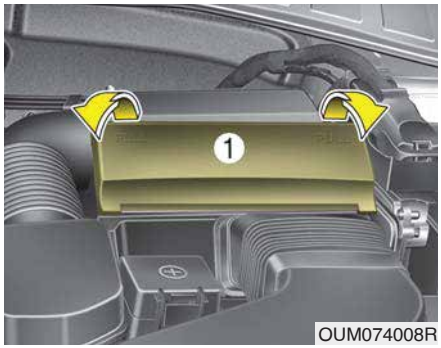

1. Pull out the air cleaner cover.

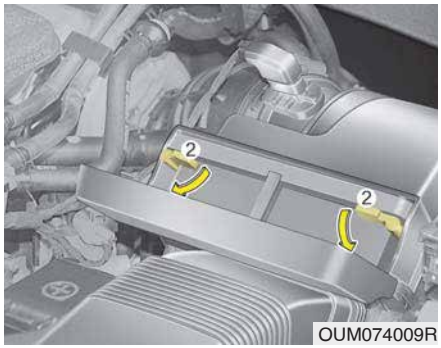

2. Unlock by turning the locking lever downward.
3. Pull the air cleaner filter to replace.
4. Lock the cover with the reverse order.

Replace the filter according to the Maintenance Schedule.

If the vehicle is operated in extremely dusty or sandy areas, replace the element more often than the usual recommended intervals. (Refer to "Maintenance under severe usage conditions" in this section.)

⚠ CAUTION

- ***Do not drive with the air cleaner removed; this will result in excessive engine wear.***
- ***When removing the air cleaner filter, be careful that dust or dirt does not enter the air intake, or damage may result.***
- ***Use parts for replacement from a professional workshop. Kia recommends to visit an authorised Kia dealer/service partner.***

CLIMATE CONTROL AIR FILTER

Filter inspection

The climate control air filter should be replaced according to the maintenance schedule. If the vehicle is operated in severely air-polluted cities or on dusty rough roads for a long period, it should be inspected more frequently and replaced earlier. When you replace the climate control air filter, replace it performing the following procedure, and be careful to avoid damaging other components.

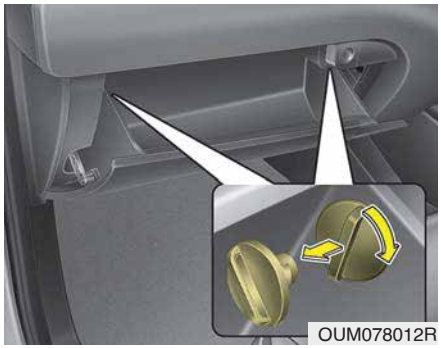

1. Open the glove box and remove the stoppers on both sides.

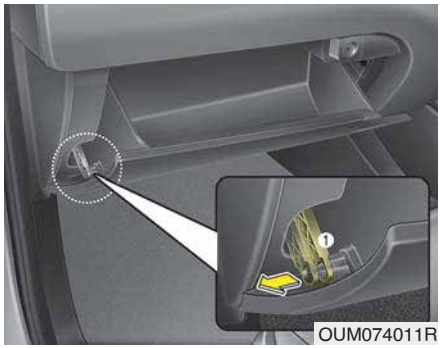

2. With the glove box open, pull the support strap (1).

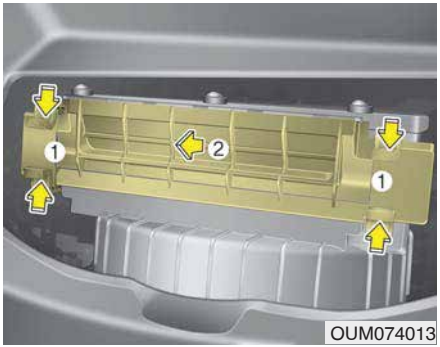

3. Remove the climate control air filter case by pulling out both sides of the cover.



4. Replace the climate control air filter.
5. Reassemble in the reverse order of disassembly.

✻ NOTICE

When replacing the climate control air filter install it properly. Otherwise, the system may produce noise and the effectiveness of the filter may be reduced.

WIPER BLADES

Blade inspection

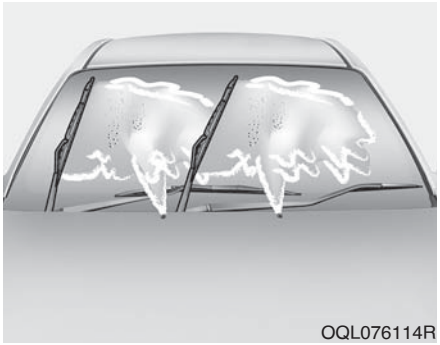
OQL076114R

✻ NOTICE

Commercial hot waxes applied by automatic car washes have been known to make the windscreen difficult to clean.

Contamination of either the windscreen or the wiper blades with foreign matter can reduce the effectiveness of the windscreen wipers. Common sources of contamination are insects, tree sap, and hot wax treatments used by some commercial car washes. If the blades are not wiping properly, clean both the window and the blades with a good cleaner or mild detergent, and rinse thoroughly with clean water.

⚠ CAUTION

To prevent damage to the wiper blades, do not use petrol, kerosene, paint thinner, or other solvents on or near them.

Blade replacement

When the wipers no longer clean adequately, the blades may be worn or cracked, and require replacement.

⚠ CAUTION

To prevent damage to the wiper arms or other components, do not attempt to move the wipers manually.

⚠ CAUTION

The use of a non-specified wiper blade could result in wiper malfunction and failure.

Front windscreen wiper blade

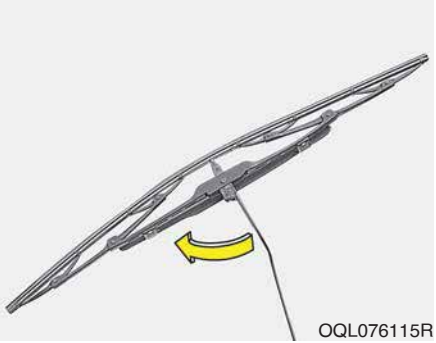

Type A

1. Raise the wiper arm and turn the wiper blade assembly to expose the plastic locking clip.

⚠ CAUTION

Do not allow the wiper arm to fall against the windscreen, since it may chip or crack the windscreen.

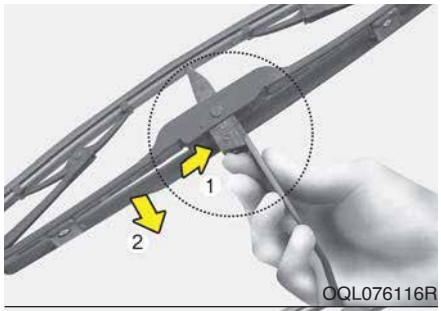

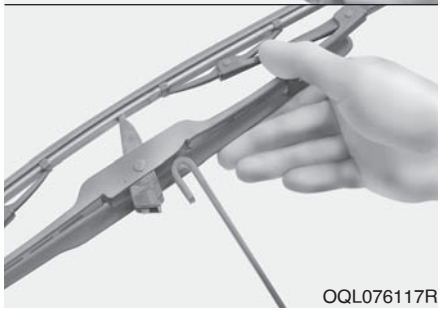

2. Compress the clip (1) and slide the blade assembly downward (2).
3. Lift it off the arm.
4. Install the blade assembly in the reverse order of removal.

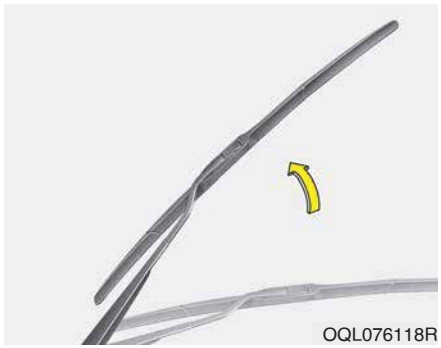

Type B

1. Raise the wiper arm.

⚠ CAUTION

Do not allow the wiper arm to fall against the windscreen, since it may chip or crack the windscreen.



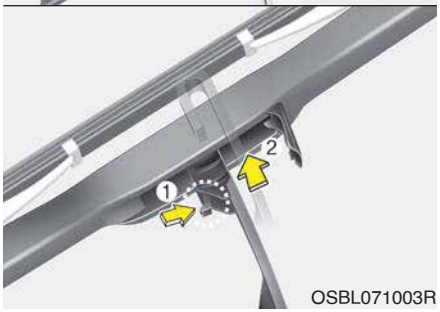

2. Turn the wiper blade clip. Then lift up the blade clip.
3. Push the clip (1) and push up the wiper arm (2).



4. Push down the wiper arm (3) and install the new blade assembly in the reverse order of removal.
5. Return the wiper arm on the windscreen.

Rear window wiper blade

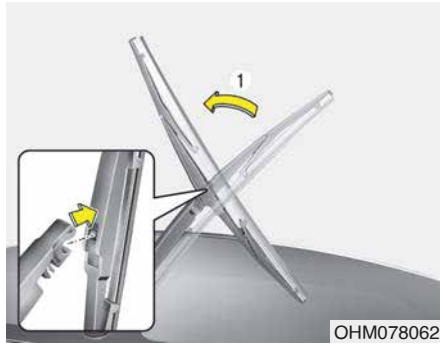

1. Raise the wiper arm and pull out the wiper blade assembly.



2. Install the new blade assembly by inserting the centre part into the slot in the wiper arm until it clicks into place.
3. Make sure the blade assembly is installed firmly by trying to pull it slightly.

To prevent damage to the wiper arms or other components, have the wiper blade replaced by a professional workshop. Kia recommends to visit an authorised Kia dealer/service partner.

BATTERY

For best battery service

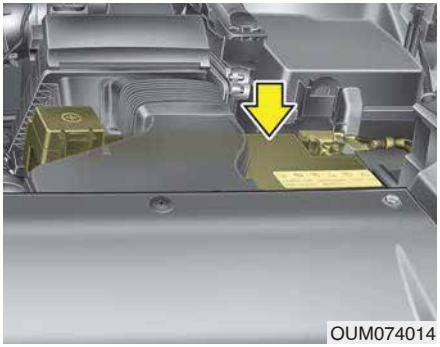

- Keep the battery securely mounted.
- Keep the battery top clean and dry.
- Keep the terminals and connections clean, tight, and coated with petroleum jelly or terminal grease.
- Rinse any spilled electrolyte from the battery immediately with a solution of water and baking soda.
- If the vehicle is not going to be used for an extended time, disconnect the battery cables.

✻ NOTICE

Basically equipped battery is maintenance free type. If your vehicle is equipped with the battery marked with LOWER and UPPER on the side, you can check the electrolyte level. The electrolyte level should be between LOWER and UPPER. If the electrolyte level is low, it needs to add distilled (demineralized) water (Never add sulfuric acid or other electrolyte). When refill, be careful not to splash the battery and adjacent components. And do not overfill the battery cells. It can cause corrosion on other parts. After then ensure that tighten the cell caps. Contact a professional workshop. Kia recommends to visit an authorised Kia dealer/service partner.

⚠ WARNING - Battery dangers

Always read the following instructions carefully when handling a battery.

Keep lighted cigarettes and all other flames or sparks away from the battery.

Hydrogen, a highly combustible gas, is always present in battery cells and may explode if ignited.

Keep batteries out of the reach of children because batteries contain highly corrosive SULFURIC ACID. Do not allow battery acid to contact your skin, eyes, clothing or paint finish.

(Continued)

(Continued)



If any electrolyte gets into your eyes, flush your eyes with clean water for at least 15 minutes and get immediate medical attention.

If electrolyte gets on your skin, thoroughly wash the contacted area. If you feel pain or burning sensation, get medical attention immediately.



Wear eye protection when charging or working near a battery. Always provide ventilation when working in an enclosed space.

(Continued)

(Continued)



An inappropriately disposed battery can be harmful to the environment and human health. Dispose the battery according to your local law(s) or regulation.

- **When lifting a plastic-cased battery, excessive pressure on the case may cause battery acid to leak, resulting in personal injury. Lift with a battery carrier or with your hands on opposite corners.**
- **Never attempt to recharge the battery when the battery cables are connected.**
- **The electrical ignition system works with high voltage. Never touch these components with the engine running or the ignition switched on.**

Failure to follow the above warnings can result in serious bodily injury or death.

⚠ CAUTION

If you connect unauthorised electronic devices to the battery, the battery may be discharged. Never use unauthorised devices.

Battery capacity label

■ Example

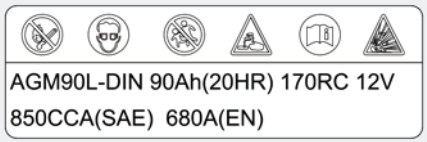

OUM074113L

❈ The actual battery label in the vehicle may differ from the illustration.

1. AGM90L-DIN : The Kia model name of battery
2. 90Ah(20HR) : The nominal capacity (in Ampere hours)
3. 170RC : The nominal reserve capacity (in min.)
4. 12V : The nominal voltage
5. 850CCA (SAE) : The cold-test current in amperes by SAE
6. 680A : The cold-test current in amperes by EN

Battery recharging

Your vehicle has a maintenance-free, calcium-based battery.

- If the battery becomes discharged in a short time (because, for example, the headlights or interior lights were left on whilst the vehicle was not in use), recharge it by slow charging (trickle) for 10 hours.
- If the battery gradually discharges because of high electric load whilst the vehicle is being used, recharge it at 20-30A for two hours.

⚠ CAUTION - AGM battery (if equipped)

- ***Absorbent Glass Matt (AGM) batteries are maintenance free and have the AGM battery serviced by a professional workshop. Kia recommends to visit an authorised Kia dealer/service partner. For charging your AGM battery, use only fully automatic battery chargers that are specially developed for AGM batteries.***
- ***When replacing the AGM battery, use parts for replacement from a professional workshop. Kia recommends to visit an authorised Kia dealer/service partner.***
- ***Do not open or remove the cap on top of the battery. This may cause leaks of internal electrolyte that could result in severe injury.***

⚠ WARNING - Recharging battery

When recharging the battery, observe the following precautions:

- **The battery must be removed from the vehicle and placed in an area with good ventilation.**
- **Do not allow cigarettes, sparks, or flame near the battery.**
- **Watch the battery during charging, and stop or reduce the charging rate if the battery cells begin gassing (boiling) violently or if the temperature of the electrolyte of any cell exceeds 49°C (120°F).**
- **Wear eye protection when checking the battery during charging.**

(Continued)

(Continued)

- **Disconnect the battery charger in the following order.**
  1. **Turn off the battery charger main switch.**
  2. **Unhook the negative clamp from the negative battery terminal.**
  3. **Unhook the positive clamp from the positive battery terminal.**

⚠ WARNING

- **Before performing maintenance or recharging the battery, turn off all accessories and stop the engine.**
- **The negative battery cable must be removed first and installed last when the battery is disconnected.**

Reset items

Items should be reset after the battery has been discharged or the battery has been disconnected.

- Auto up/down window
- Sunroof
- Trip computer
- Climate control system
- Integrated Memory System
- Audio

TYRES AND WHEELS

Tyre care

For proper maintenance, safety, and maximum fuel economy, you must always maintain recommended tyre inflation pressures and stay within the load limits and weight distribution recommended for your vehicle.

Recommended cold tyre inflation pressures

All tyre pressures (including the spare) should be checked when the tyres are cold. “Cold Tyres” means the vehicle has not been driven for at least three hours or driven less than 1.6 km (one mile).

Recommended pressures must be maintained for the best ride, top vehicle handling, and minimum tyre wear.

For recommended inflation pressure, refer to “Tyre and wheels” in section 9.

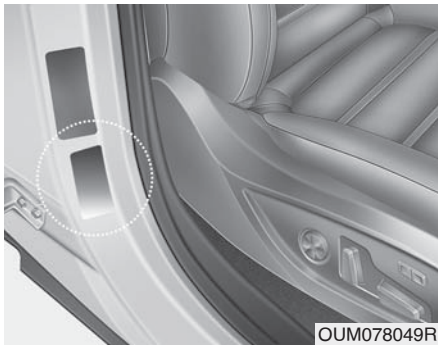

All specifications (sizes and pressures) can be found on a label attached to the vehicle.

⚠ WARNING - Tyre underinflation

Severe underinflation (70 kPa (10 psi) or more) can lead to severe heat build-up, causing blowouts, tread separation and other tyre failures that can result in the loss of vehicle control leading to severe injury or death. This risk is much higher on hot days and when driving for long periods at high speeds.

⚠ CAUTION

- ***Underinflation also results in excessive wear, poor handling and reduced fuel economy. Wheel deformation also is possible. Keep your tyre pressures at the proper levels. If a tyre frequently needs refilling, have the system checked by a professional workshop. Kia recommends to visit an authorised Kia dealer/service partner.***
- ***Overinflation produces a harsh ride, excessive wear at the centre of the tyre tread, and a greater possibility of damage from road hazards.***

⚠ CAUTION

- *Warm tyres normally exceed recommended cold tyre pressures by 28 to 41 kPa (4 to 6 psi). Do not release air from warm tyres to adjust the pressure or the tyres will be underinflated.*
- *Be sure to reinstall the tyre inflation valve caps. Without the valve cap, dirt or moisture could get into the valve core and cause air leakage. If a valve cap is missing, install a new one as soon as possible.*

⚠ WARNING - Tyre Inflation

Overinflation or underinflation can reduce tyre life, adversely affect vehicle handling, and lead to sudden tyre failure. This could result in loss of vehicle control and potential injury.

⚠ CAUTION - Tyre pressure

Always observe the following:

- *Check tyre pressure when the tyres are cold. (After vehicle has been parked for at least three hours or hasn't been driven more than 1.6 km (one mile) since startup.)*
- *Check the pressure of your spare tyre each time you check the pressure of other tyres.*
- *Never overload your vehicle. Be careful not to overload a vehicle luggage rack if your vehicle is equipped with one.*
- *Worn, old tyres can cause accidents. If your tread is badly worn, or if your tyres*

Checking tyre inflation pressure

Check your tyres once a month or more.

Also, check the tyre pressure of the spare tyre.

How to check

Use a good quality gauge to check tyre pressure. You can not tell if your tyres are properly inflated simply by looking at them. Radial tyres may look properly inflated even when they're underinflated.

Check the tyre's inflation pressure when the tyres are cold. - "Cold" means your vehicle has been sitting for at least three hours or driven no more than 1.6 km (1 mile).

Remove the valve cap from the tyre valve stem. Press the tyre gauge firmly onto the valve to get a pressure measurement. If the cold tyre inflation pressure matches the recommended pressure on the tyre and loading information label, no further adjustment is necessary. If the pressure is low, add air until you reach the recommended amount.

If you overfill the tyre, release air by pushing on the metal stem in the centre of the tyre valve. Recheck the tyre pressure with the tyre gauge. Be sure to put the valve caps back on the valve stems. They help prevent leaks by keeping out dirt and moisture.

⚠ WARNING

- **Inspect your tyres frequently for proper inflation as well as wear and damage. Always use a tyre pressure gauge.**
- **Tyres with too much or too little pressure wear unevenly causing poor handling, loss of vehicle control, and sudden tyre failure leading to accidents, injuries, and even death. The recommended cold tyre pressure for your vehicle can be found in this manual and on the tyre label located on the driver's side centre pillar.**
- **Worn tyres can cause accidents. Replace tyres that are worn, show uneven wear, or are damaged.**
- **Remember to check the pressure of your spare tyre. Kia recommends that you check the spare every time you check the pressure of the other tyres on your vehicle.**

Tyre rotation

To equalize tread wear, it is recommended that the tyres be rotated every 10,000 km (6,500 miles) or sooner if irregular wear develops.

During rotation, check the tyres for correct balance.

When rotating tyres, check for uneven wear and damage. Abnormal wear is usually caused by incorrect tyre pressure, improper wheel alignment, out-of-balance wheels, severe braking or severe cornering. Look for bumps or bulges in the tread or side of tyre. Replace the tyre if you find either of these conditions. Replace the tyre if fabric or cord is visible. After rotation, be sure to bring the front and rear tyre pressures to specification and check lug nut tightness.

Refer to “Tyre and wheels” in section 9.

With a full-size spare tyre (if equipped)

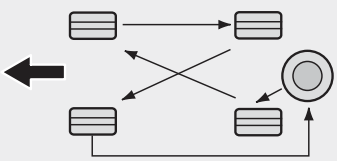

CBGQ0706

Without a spare tyre

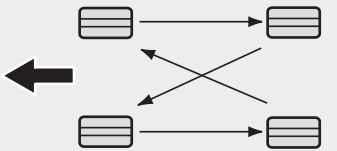

S2BLA790A

Directional tyres (if equipped)

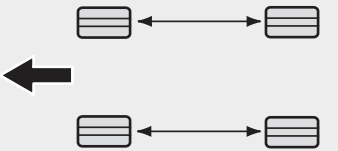

CBGQ0707A

Disc brake pads should be inspected for wear whenever tyres are rotated.

✻ NOTICE

Rotate radial tyres that have an asymmetric tread pattern only from front to rear and not from right to left.

⚠ WARNING

- **Do not use the compact spare tyre (if equipped) for tyre rotation.**
- **Do not mix bias ply and radial ply tyres under any circumstances. This may cause unusual handling characteristics that could result in death, severe injury, or property damage.**

Wheel alignment and tyre balance

The wheels on your vehicle were aligned and balanced carefully at the factory to give you the longest tyre life and best overall performance.

In most cases, you will not need to have your wheels aligned again. However, if you notice unusual tyre wear or your vehicle pulling one way or the other, the alignment may need to be reset.

If you notice your vehicle vibrating when driving on a smooth road, your wheels may need to be rebalanced.

⚠ CAUTION

Improper wheel weights can damage your vehicle's aluminum wheels. Use only approved wheel weights.

Tyre replacement



If the tyre is worn evenly, a tread wear indicator (A) will appear as a solid band across the tread. This shows there is less than 1.6 mm (1/16 in.) of tread left on the tyre. Replace the tyre when this happens.

Do not wait for the band to appear across the entire tread before replacing the tyre.

✻ NOTICE

We recommend that when replacing tyres, use the same originally supplied with the vehicles.
If not, that affects driving performance.

⚠ CAUTION

When replacing the tyres, recheck and tighten the wheel nuts after driving about 1,000 km (620miles). If the steering wheel shakes or the vehicle vibrates whilst driving, the tyre is out of balance. Align the tyre balance. If the problem is not solved, contact a professional workshop. Kia recommends to visit an authorised Kia dealer/service partner.

⚠ WARNING - Replacing tyres

To reduce the chance of serious or fatal injuries from an accident caused by tyre failure or loss of vehicle control:

- **Replace tyres that are worn, show uneven wear, or are damaged. Worn tyres can cause loss of braking effectiveness, steering control, and traction.**
- **Do not drive your vehicle with too little or too much pressure in your tyres. This can lead to uneven wear and tyre failure.**
- **When replacing tyres, never mix radial and bias-ply tyres on the same car. You must replace all tyres (including the spare) if moving from radial to bias-ply tyres.**
- **It is best to replace all four tyres at the same time. If that is not possible, or necessary, then replace the two front or two rear tyres as a pair.**

(Continued)

(Continued)

Replacing just one tyre can seriously affect your vehicle's handling.

- **Using tyres and wheels other than the recommended sizes could cause unusual handling characteristics and poor vehicle control, resulting in a serious accident.**
- **Wheels that do not meet Kia's specifications may fit poorly and result in damage to the vehicle or unusual handling and poor vehicle control.**
- **The ABS works by comparing the speed of the wheels. The tyre size affects wheel speed. When replacing tyres, all 4 tyres must use the same size originally supplied with the vehicle. Using tyres of a different size can cause the ABS (Anti-lock Brake System) and ESC (Electronic Stability Control) to work irregularly.**

Compact spare tyre replacement (if equipped)

A compact spare tyre has a shorter tread life than a regular size tyre. Replace it when you can see the tread wear indicator bars on the tyre. The replacement compact spare tyre should be the same size and design tyre as the one provided with your new vehicle and should be mounted on the same compact spare tyre wheel. The compact spare tyre is not designed to be mounted on a regular size wheel, and the compact spare tyre wheel is not designed for mounting a regular size tyre.

Wheel replacement

When replacing the metal wheels for any reason, make sure the new wheels are equivalent to the original factory units in diameter, rim width and offset.

⚠ WARNING

A wheel that is not the correct size may adversely affect wheel and bearing life, braking and stopping abilities, handling characteristics, ground clearance, body-to-tyre clearance, snow chain clearance, speedometer and odometer calibration, headlight aim and bumper height.

Tyre traction

Tyre traction can be reduced if you drive on worn tyres, tyres that are improperly inflated or on slippery road surfaces. Tyres should be replaced when tread wear indicators appear. Slow down whenever there is rain, snow or ice on the road to reduce the possibility of losing control of the vehicle.

Tyre maintenance

In addition to proper inflation, correct wheel alignment helps to decrease tyre wear. If you find a tyre is worn unevenly, have a professional workshop check the wheel alignment. Kia recommends to visit an authorised Kia dealer/service partner.

When you have new tyres installed, make sure they are balanced. This will increase vehicle ride comfort and tyre life. Additionally, a tyre should always be rebalanced if it is removed from the wheel.

Tyre sidewall labeling

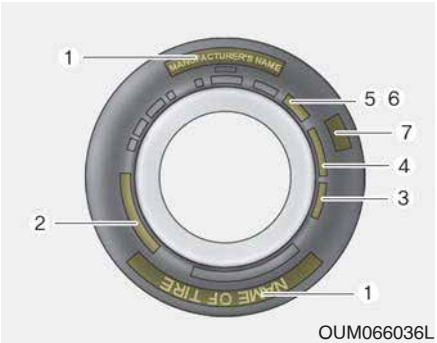

OUM066036L

This information identifies and describes the fundamental characteristics of the tyre and also provides the tyre identification number (TIN) for safety standard certification. The TIN can be used to identify the tyre in case of a recall.

1. Manufacturer or brand name

Manufacturer or Brand name is shown.

2. Tyre size designation

A tyre's sidewall is marked with a tyre size designation. You will need this information when selecting replacement tyres for your vehicle. The following explains what the letters and numbers in the tyre size designation mean.

Example tyre size designation:

(These numbers are provided as an example only; your tyre size designator could vary depending on your vehicle.)

P235/55R19 108T

P - Applicable vehicle type (tyres marked with the prefix “P” are intended for use on passenger vehicles or light trucks; however, not all tyres have this marking).

235 - Tyre width in millimeters.

55 - Aspect ratio. The tyre’s section height as a percentage of its width.

R - Tyre construction code (Radial).

19 - Rim diameter in inches.

108 - Load Index, a numerical code associated with the maximum load the tyre can carry.

T - Speed Rating Symbol. See the speed rating chart in this section for additional information.

Wheel size designation

Wheels are also marked with important information that you need if you ever have to replace one. The following explains what the letters and numbers in the wheel size designation mean.

Example wheel size designation:

7.5JX19

7.5 - Rim width in inches.

J - Rim contour designation.

19 - Rim diameter in inches.

Tyre speed ratings

The chart below lists many of the different speed ratings currently being used for passenger car tyres. The speed rating is part of the tyre size designation on the sidewall of the tyre. This symbol corresponds to that tyre's designed maximum safe operating speed.

Speed Rating Symbol	Maximum Speed
S	180 km/h (112 mph)
T	190 km/h (118 mph)
H	210 km/h (130 mph)
V	240 km/h (149 mph)
Z	Above 240 km/h (149 mph)

3. Checking tyre life (TIN : Tyre Identification Number)

Any tyres that are over 6 years old, based on the manufacturing date, (including the spare tyre) should be replaced by new ones. You can find the manufacturing date on the tyre sidewall (possibly on the inside of the wheel), displaying the DOT Code. The DOT Code is a series of numbers on a tyre consisting of numbers and English letters. The manufacturing date is designated by the last four digits (characters) of the DOT code.

DOT : XXXX XXXX OOOO

The front part of the DOT means a plant code number, tyre size and tread pattern and the last four numbers indicate week and year manufactured.

For example:

DOT XXXX XXXX 1619 represents that the tyre was produced in the 16th week of 2019.

⚠ WARNING - Tyre age

Tyres degrade over time, even when they are not being used.

Regardless of the remaining tread, we recommend that tyres be replaced after approximately six (6) years of normal service. Heat caused by hot climates or frequent high loading conditions can accelerate the aging process. Failure to follow this warning can result in sudden tyre failure, which could lead to a loss of control and an accident involving serious injury or death.

4. Tyre ply composition and material

The number of layers or plies of rubber-coated fabric in the tyre. Tyre manufacturers also must indicate the materials in the tyre, which include steel, nylon, polyester, and others. The letter "R" means radial ply construction; the letter "D" means diagonal or bias ply construction; and the letter "B" means belted-bias ply construction.

5. Maximum permissible inflation pressure

This number is the greatest amount of air pressure that should be put in the tyre. Do not exceed the maximum permissible inflation pressure. Refer to the Tyre and Loading Information label for recommended inflation pressure.

6. Maximum load rating

This number indicates the maximum load in kilograms and pounds that can be carried by the tyre. When replacing the tyres on the vehicle, always use a tyre that has the same load rating as the factory installed tyre.

7. Uniform tyre quality grading

Quality grades can be found where applicable on the tyre sidewall between tread shoulder and maximum section width.

For example:

TREADWEAR 200

TRACTION AA

TEMPERATURE A

Tread wear

The tread wear grade is a comparative rating based on the wear rate of the tyre when tested under controlled conditions on a specified government test course. For example, a tyre graded 150 would wear one-and-a-half times (1½) as well on the government course as a tyre graded 100.

The relative performance of tyres depends upon the actual conditions of their use, however, and may depart significantly from the norm due to variations in driving habits, service practices and differences in road characteristics and climate.

These grades are molded on the side-walls of passenger vehicle tyres. The tyres available as standard or optional equipment on your vehicle may vary with respect to grade.

Traction - AA, A, B & C

The traction grades, from highest to lowest, are AA, A, B and C. Those grades represent the tyre's ability to stop on wet pavement as measured under controlled conditions on specified government test surfaces of asphalt and concrete. A tyre marked C may have poor traction performance.

Temperature -A, B & C

The temperature grades are A (the highest), B, and C, representing the tyre's resistance to the generation of heat and its ability to dissipate heat when tested under controlled conditions on a specified indoor laboratory test wheel.

Sustained high temperature can cause the material of the tyre to degenerate and reduce tyre life, and excessive temperature can lead to sudden tyre failure. Grades B and A represent higher levels of performance on the laboratory test wheel than the minimum required by law.

⚠ WARNING

The traction grade assigned to this tyre is based on straight-ahead braking traction tests, and does not include acceleration, cornering, hydroplaning, or peak traction characteristics.

⚠ WARNING - Tyre temperature

The temperature grade for this tyre is established for a tyre that is properly inflated and not overloaded. Excessive speed, underinflation, or excessive loading, either separately or in combination, can cause heat build-up and possible sudden tyre failure. This can cause loss of vehicle control and serious injury or death.

Low aspect ratio tyre (if equipped)

Low aspect ratio tyres, whose aspect ratio is lower than 50, are provided for sporty looks.
Because the low aspect ratio tyres are optimized for handling and braking, it may be more uncomfortable to ride in and there is more noise compare with normal tyres.

⚠ CAUTION

- ***It is not easy to recognize the tyre damage with your own eyes. But if there is the slightest hint of tyre damage, even though you cannot see the tyre damage with your own eyes, have the tyre checked or replaced because the tyre damage may cause air leakage from the tyre.***
- ***If the tyre is damaged by driving on a rough road, off road, pothole, manhole, or kerb stone, it will not be covered by the warranty.***
- ***You can find out the tyre information on the tyre sidewall.***

⚠ CAUTION

Because the sidewall of the low aspect ratio tyre is shorter than the normal, the wheel and tyre of the low aspect ratio tyre is easier to be damaged. So, follow the instructions below.

- ***When driving on a rough road or off road, drive cautiously because tyres and wheels may be damaged. And after driving, inspect tyres and wheels.***
- ***When passing over a pothole, speed bump, manhole, or kerb stone, drive slowly so that the tyres and wheels are not damaged.***
- ***If the tyre is impacted, inspect the tyre condition or contact a professional workshop. Kia recommends to visit an authorised Kia dealer/service partner.***
- ***To prevent damage to the tyre, inspect the tyre condition and pressure every 3,000km.***

FUSES

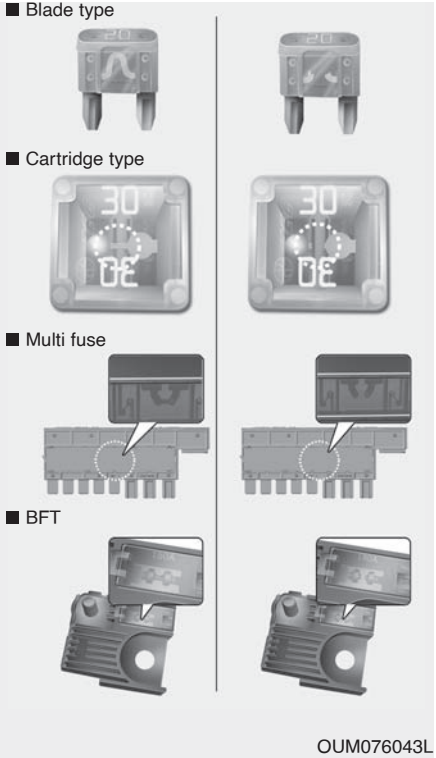

❊ Left side : Normal
Right side : blown

A vehicle's electrical system is protected from electrical overload damage by fuses.

This vehicle has 2 (or 3) fuse panels, one located in the driver's side panel bolster, the others in the engine compartment near the battery.

If any of your vehicle's lights, accessories, or controls do not work, check the appropriate circuit fuse. If the fuse becomes disconnected, the electrical system it protected will not function properly. Therefore, replace the fuse.

If the electrical system does not work, first check the driver's side fuse panel.

In order to replace the fuse, turn off the engine and switch of all electrical system first. Then, disconnect the negative battery cable of the fuse and replace at a level and safe location.

Always replace a blown fuse with one of the same rating. If the replacement fuse blows, this indicates an electrical problem. Avoid using the system involved and immediately consult a professional workshop. Kia recommends to consult an authorised Kia dealer/service partner.

Four kinds of fuses are used: blade type for lower amperage rating, cartridge type, and multi fuse for higher amperage ratings.

⚠ WARNING - Fuse replacement

- **Never replace a fuse with anything but another fuse of the same rating.**
- **A higher capacity fuse could cause damage and possibly a fire.**
- **Never install a wire or aluminum foil instead of the proper fuse even as a temporary repair. It may cause extensive wiring damage and a possible fire.**
- **Do not arbitrarily modify or add-on electric wiring of the vehicle.**

⚠ CAUTION

Do not use a screwdriver or any other metal object to remove fuses because it may cause a short circuit and damage the system.

✻ NOTICE

The actual fuse/relay panel label may differ from equipped items.

⚠ CAUTION

- ***When replacing a blown fuse or relay with a new one, make sure the new fuse or relay fits tightly into the clips. The incomplete fastening fuse or relay may cause the vehicle wiring and electric systems damage and a possible fire.***
- ***Do not remove fuses, relays and terminals fastened with bolts or nuts. The fuses, relays and terminals may be fastened incompletely, and it may cause a possible fire. If fuses, relays and terminals fastened with bolts or nuts are blown, consult a professional workshop. Kia recommends to consult an authorised Kia dealer/service partner.***

(Continued)

(Continued)

- ***Do not input any other objects except fuses or relays into fuse/relay terminals such as a driver or wiring. It may cause contact failure and system malfunction.***
- ***Do not plug in screwdrivers or aftermarket wiring into the terminal originally designed for fuse and relays only. The electrical system and wiring of the vehicle interior may be damaged or burned due to contact failure.***

Inner panel fuse replacement



OUM078015R

1. Turn the ignition switch and all other switches off.
2. Open the fuse panel cover.

If the switch is located in the “OFF”, caution will be displayed in the cluster.

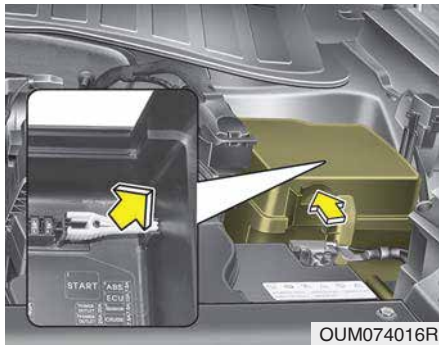

OUM074016R

3. Pull the suspected fuse straight out. Use the removal tool provided in the main fuse box in the engine compartment.
4. Check the removed fuse; replace it if it is blown.

   Spare fuses are provided in the instrument panel fuse panel (or in the engine compartment fuse panel).
5. Push in a new fuse of the same rating, and make sure it fits tightly in the clips.

If it fits loosely, consult a professional workshop. Kia recommends to consult an authorised Kia dealer/service partner.

If you do not have a spare, use a fuse of the same rating from a circuit you may not need for operating the vehicle, such as the cigarette lighter fuse.

If the headlights or taillights, stoplights, courtesy lamp, day time running lights (D.R.L) do not work and the fuses are OK, check the fuse panel in the engine compartment. If a fuse is blown, it must be replaced.

Even without any problem to the lamps, have a check at a professional workshop for assistance. Kia recommends to visit the nearest authorised Kia dealer/service partner.

Fuse switch

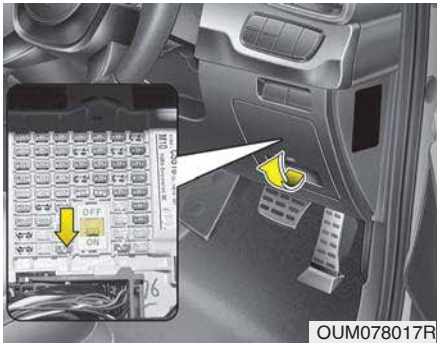

Always, put the fuse switch at the ON position.

If you move the switch to the OFF position, some items such as audio and digital clock must be reset and transmitter (or smart key) may not work properly.

If the fuse switch is in OFF, a warning sign will illuminate on the dashboard.

⚠ CAUTION

- ***Put all switches in ON when driving.***
- ***If the vehicle remains idle for over 1 month, put all switches in OFF to prevent the batteries from being discharged.***
- ***Excluding long-term parking for over 1 month, the contact points of switches may wear out upon extensive use. Please refrain from excessive use of switches.***

Engine compartment fuse replacement

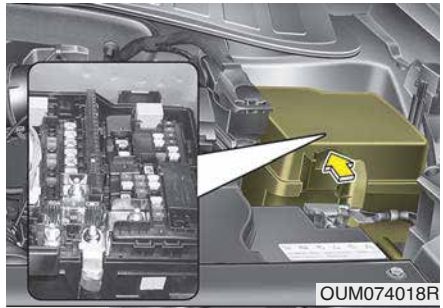

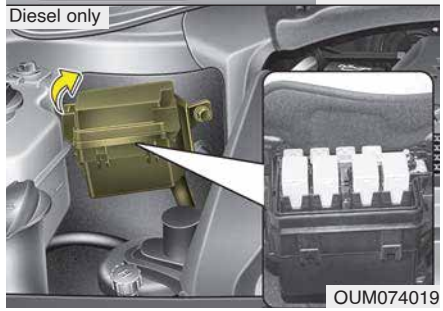

1. Turn the ignition switch and all other switches off.

2. Remove the fuse panel cover by pressing the tab and pulling the cover up. When the blade type fuse is disconnected, remove it by using the clip designed for changing fuses located in the engine room fuse box. Upon removal, securely insert reserve fuse of equal quantity.
3. Check the removed fuse; replace it if it is blown. To remove or insert the fuse, use the fuse puller in the engine compartment fuse panel.
4. Push in a new fuse of the same rating, and make sure it fits tightly in the clips. If it fits loosely, consult a professional workshop. Kia recommends to consult an authorised Kia dealer/service partner.

⚠ CAUTION

After checking the fuse panel in the engine compartment, securely install the fuse panel. If not, cover through the audible clicking sound. Electrical failures may occur from water contact.

Multi fuse

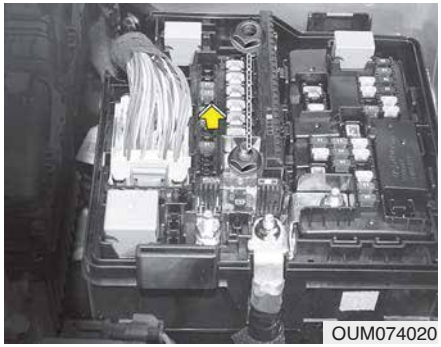

If the multi fuse is blown, it must be removed as follows:

1. Disconnect the negative battery cable.
2. Remove the nuts shown in the picture above.
3. Replace the fuse with a new one of the same rating.
4. Reinstall in the reverse order of removal.

✻ NOTICE

If the multi fuse is blown, consult a professional workshop. Kia recommends to consult an authorised Kia dealer/service partner.

Main fuse

■ Petrol Engine

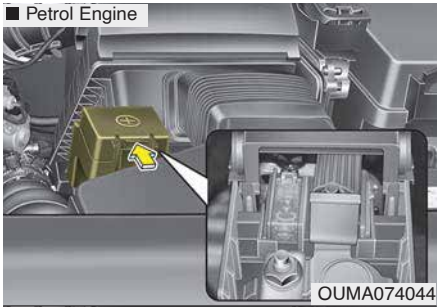

OUMA074044

■ Diesel Engine

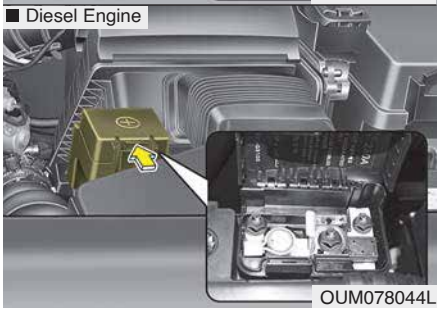

OUM078044L

If the main fuse is blown, it must be removed as follows:

1. Turn off the engine.
2. Disconnect the negative battery cable.
3. Remove the nuts shown in the picture above.
4. Replace the fuse with a new one of the same rating.
5. Reinstall in the reverse order of removal

✻ NOTICE

The electronic system may not function correctly even when the engine room and internal fuse box's individual fuses are not disconnected. In such case the cause of the problem may be disconnection of the main fuse (BFT type), which is located inside the positive battery terminal (+) cap. Since the main fuse is designed more intricately than other parts, visit a professional workshop. Kia recommends to visit the nearest authorised Kia dealer/service partner.

⚠ CAUTION

Visually inspect the battery cap for secure closing. If the battery cap is not securely latched, the electrical system may be damaged to due influx of moisture into the system.

Fuse/relay panel description


OUM078021R

Inside the fuse/relay panel covers, you can find the fuse/relay label describing fuse/relay name and capacity.

✻ NOTICE

Not all fuse panel descriptions in this manual may be applicable to your vehicle. It is accurate at the time of printing. When you inspect the fuse panel in your vehicle, refer to the fuse panel label.

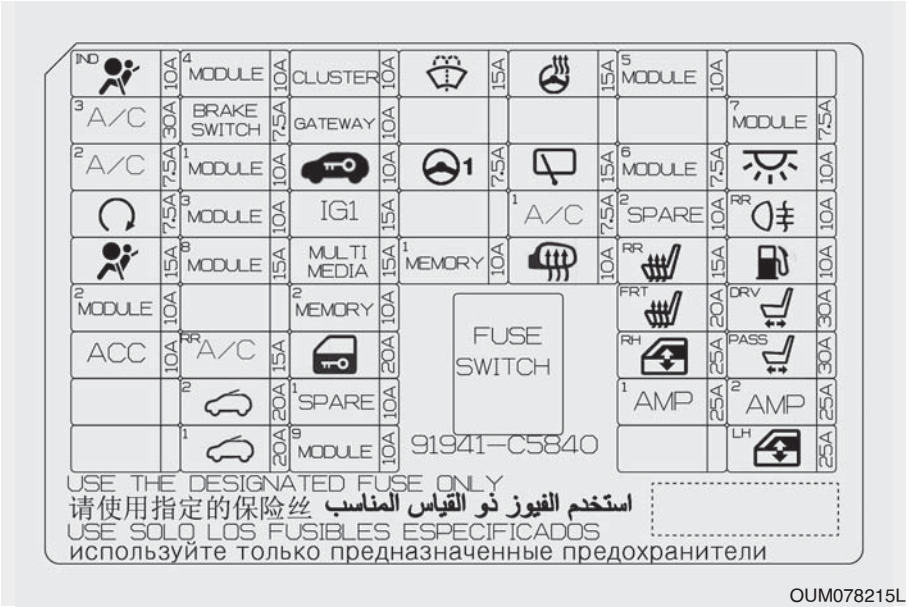

OUM078215L

Description	Symbol	Fuse rating	Protected component
AIR BAG IND.	IND	10A	SRS Control Module, A/C Control Module
A/CON 3	3 A/C	30A	Fuse (F3), Blower Motor
A/CON 2	2 A/C	7.5A	Fuse (F2), A/C Control Module (Auto)
START		7.5A	ICM Relay Box (Burglar Alarm Relay), PCB Block (RLY. 4), ECM, Smart Key Control Module, Transaxle Range Switch, Clutch & Ignition Lock Switch
AIR BAG		15A	SRS Control Module
MODULE 2	2 MODULE	10A	Crash Pad Switch, Tyre Pressure Monitoring Module, AWD ECM, Lane Departure Warning, ATM Shift Lever IND., Parking Assist-Angled ,Parking Assist-Parallel, Parking Assist-Perpendicular Forward, Parking Assist-Perpendicular Reverse, Blind-Spot Collision Warning, Console Switch, Electronic Parking Brake Module
ACC	ACC	10A	PCB Block (PDM (ACC) Relay, Power Outlet Relay), BCM, Audio, A/V & Navigation Head Unit, Around View Monitor with Parking Guidance, Smart Key Control Module, Low DC-DC Converter (Audio), Low DC-DC Converter (AMP), AMP, USB Charger #1/#2, Wireless Charger
MODULE 4	4 MODULE	10A	Head Lamp Levelling Device Switch, Head Lamp LH/RH, Auto Head Lamp Levelling Device Module, Adaptive Front Lighting Module, Head Lamp Levelling Device Actuator LH/RH
BRAKE SWITCH	BRAKE SWITCH	7.5A	Smart Key Control Module, ECM (D4HA/D4HB), Stop Lamp Switch
MODULE 3	3 MODULE	10A	A/C Control Module, A/V & Navigation Head Unit, Low DC-DC Converter (Audio), Low DC-DC Converter (AMP), Electro Chromic Mirror, Driver IMS Control Module, Rear Seat Warmer LH, Front Air Ventilation Control Module, Front/Rear Seat Warmer Control Module
MODULE 1	1 MODULE	10A	BCM, Stop Lamp Switch (Except D4HA/D4HB), Driver/Passenger Doormodule

Description	Symbol	Fuse rating	Protected component
MODULE 8	8 MODULE	15A	Smart Key Control Module, Immobiliser Unit
A/CON RR	RR A/C	15A	ICM Relay Box (Rear Blower Motor Relay)
SUNROOF 2	2	20A	Sunroof Control Module (Roller)
SUNROOF 1	1	20A	Sunroof Control Module (Glass)
CLUSTER	CLUSTER	10A	Instrument Cluster
GATEWAY	GATEWAY	10A	Gateway (MCU IG1)
IMMO.		10A	Smart Key Control Module, Immobiliser Module
IG1	IG 1	15A	E/R Junction Block (Fuse - F34/F36/F37/F38), PCB Block (Fuse - F40/F41/F44/F46)
MULTIMEDIA	MULTI MEDIA	10A	USB Charger #1/#2, Audio, A/V & Navigation Head Unit, Low DC-DC Converter (Audio)
MEMORY 2	2 MEMORY	10A	Instrument Cluster, Data Link Connector, A/C Control Module, Rear A/C Control Module, Clock Spring, Siren Control Module, UIP Sensor, Rain Sensor, Driver/Passenger Door Module, Passenger Power Window Switch, Driver IMS Control Module
DOOR LOCK		20A	Door Lock Relay, Door Unlock Relay, Tail Gate Relay, ICM Relay Box (Dead Lock Relay), Driver Door Module
MODULE 9	9 MODULE	10A	Start/Stop Button Switch, Smart Key Control Module, Ignition Switch

Description	Symbol	Fuse rating	Protected component
WASHER		15A	BCM, Multifunction Switch
MDPS		7.5A	MDPS Unit
MEMORY 1		10A	BCM
HTD STRG		15A	BCM
WIPER RR		15A	Rear Wiper Relay, Rear Wiper Motor
A/CON 1		7.5A	A/C Control Module, Cluster Ionizer, E/R Junction Block (RLY. 1), Sub Junction Block (RLY. 3/RLY. 4),ICM Relay Box (Rear Blower Motor Relay)
HTD MIRR		10A	A/C Control Module, Driver/Passenger Power Outside Mirror
MODULE 5		7.5A	BCM, Smart Key Control Module
MODULE 6		7.5A	Surround View Unit, Rear A/C Control Module, Rear Seat Warmer LH, Front Air Ventilation Control Module, Front/Rear Seat Warmer Control Module ICM Relay Box (Cornering Lamp Relay LH/RH)
S/HEATER RR		15A	Rear Seat Warmer LH, Rear Seat Warmer Control Module
S/HEATER FRT		20A	Front Air Ventilation Control Module, Front Seat Warmer Control Module
P/WDW RH		25A	Rear Safety Power Window RH, Rear Power Window Switch RH, [LHD] Passenger Safety Power Window Module, Passenger Door Module, Passenger Power Window Switch [RHD] Driver Safety Power Window Module, Driver Door Module

Description	Symbol	Fuse rating	Protected component
AMP 1	1 AMP	25A	AMP, Low DC-DC Converter (AMP)
MODULE 7	7 MODULE	7.5A	Gateway (MCU B+), Sport Mode Switch, Key Solenoid, Tyre Pressure Monitoring Module
INTERIOR LAMP		10A	Glove Box Lamp, Ignition Key Ill. & Door Warning Switch, Driver Foot Lamp, Vanity Lamp LH/RH, Cargo Lamp, Centre Room Lamp, Overhead Console Lamp, Rear Personal Lamp LH/RH
FOG LAMP RR	RR	10A	ICM Relay Box (Rear Fog Lamp Relay)
FUEL LID		10A	Fuel Filler & Tail Gate Switch
P/SEAT DRV	DRV	30A	Driver IMS Control Module, Driver Seat Manual Switch
P/SEAT PASS	PASS	30A	Passenger Seat Manual Switch
AMP 2	2 AMP	25A	AMP, Low DC-DC Converter (AMP)
P/WDW LH	LH	25A	Rear Safety Power Window LH, Rear Power Window Switch LH, [LHD] Driver Safety Power Window Module, Driver Door Module [RHD] Passenger Safety Power Window Module, Passenger Door Module, Passenger Power Window Switch

Engine compartment fuse panel



OUM074023R

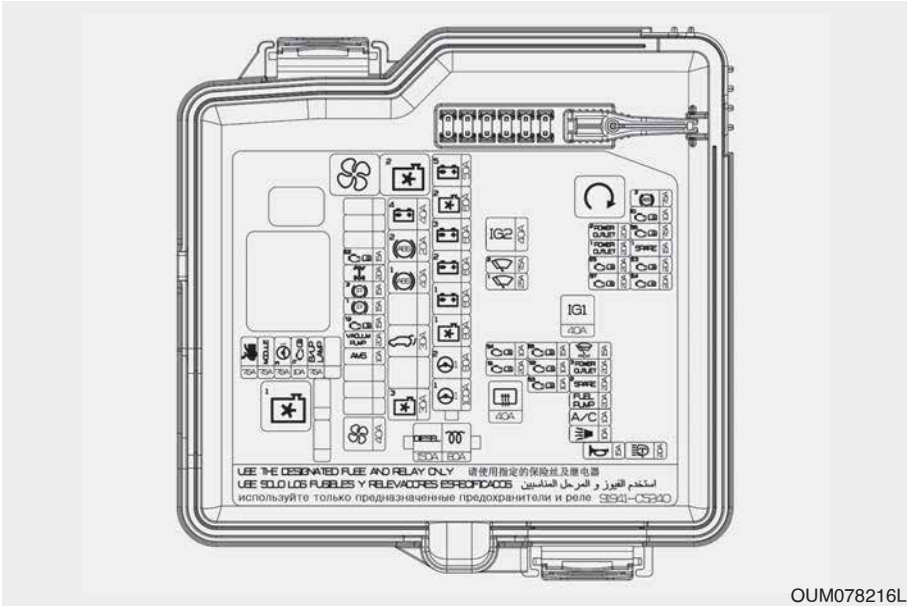

OUM078216L

Description	Symbol	Fuse rating	Protected component
DIESEL	DIESEL	150A	Sub Junction Block (Fuse - F1/F2/F3/F4)
GLOW		60A	[D4HA/D4HB] Glow Relay Unit
MDPS 1		100A	MDPS Unit (Rack Type)
MDPS 2		80A	MDPS Unit (Column Type)
C/FAN 1		80A	Cooling Fan Motor [A/T & Europe - D4HA/D4HB/G4KJ]
C/FAN 3		80A	Cooling Fan (Resister Type)
B+1		60A	IGPM (Fuse - F42/F52/F53/F55)
B+2		60A	IGPM (Fuse - F43/F44/F45/F50/F51/F54)
B+3		60A	IGPM (IPS 1, Fuse - F48, Leak Current Autocut Device Fuse - F23/F24/F32)
B+5		50A	IGPM (IPS 0/IPS 2/IPS 3/IPS 4/IPS 5/IPS 6/IPS 7/IPS 8, Fuse - F18)
C/FAN 2		30A	RLY. 3 (Cooling Fan #1 Relay) [(M/T & Except Europe - D4HA/D4HB/G4KJ), (G4KH/G4KE/G6DF)]
POWER TAIL GATE		30A	Power Tail Gate Module
ABS 1		40A	ABS Control Module, ESC Control Module, Multipurpose Check Connector
ABS 2		20A	ABS Control Module, ESC Control Module
B+4		40A	IGPM (Fuse - F11/F14/F16/F17/F25/F27)

Description	Symbol	Fuse rating	Protected component
BLOWER		40A	RLY. 1 (Blower Relay)
AMS	AMS	10A	Battery Sensor
VACUUM PUMP	VACUUM PUMP	20A	[G4KH] Vacuum Pump
TCU 2		15A	[D4HA/D4HB] TCM, [G4KJ/G4KH/G4KE] PCM
EPB 1		15A	Electronic Parking Brake Module
EPB 2		15A	Electronic Parking Brake Module
AWD		20A	AWD ECM
ECU 2		15A	[G4KJ/G4KH/G4KE/G6DF] PCM
ACTIVE BONNET		7.5A	Active Bonnet Lift Control Module
MDPS 3		7.5A	MDPS Unit (Rack Type)
TCU 1		10A	Transaxle Range Switch, [D4HA/D4HB] TCM
BACK-UP LAMP	B/UP LAMP	7.5A	[M/T] Back Up Lamp Switch [A/T] Inhibitor Switch
ABS 3		7.5A	ABS Control Module, ESC Control Module
ECU 1		10A	[D4HA/D4HB] ECM, [G4KJ/G4KH/G4KE/G6DF] PCM

Description	Symbol	Fuse rating	Protected component
IG 2	IG 2	40A	RLY. 4 (Start Relay), PDM (IG2) Relay, Ignition Switch
POWER OUTLET 1	1 POWER OUTLET	20A	Front Power Outlet & Cigarette Lighter
SENSOR 6	S6	7.5A	Multipurpose Check Connector, [D4HA/D4HB] Sub Junction Block (RLY. 1), Glow Relay Unit, Diesel Filter, [G4KH] Brake Vacuum Switch, Vacuum Pump
POWER OUTLET 2	2 POWER OUTLET	20A	Front Power Outlet
MODULE	MODULE	7.5A	Smart Cruise Control, Forward Collision-Avoidance Assist
H/LAMP WASHER		20A	Head Lamp Washer Relay
ECU 4	E4	20A	[G4KH] PCM (E-CVVT Relay)
WIPER FRT 1	1	25A	Wiper Low Relay
WIPER FRT 2	2	7.5A	Wiper Blade Position Switch
A/CON	A/C	10A	Air-Con Compressor Clutch Switch
DEICER	FRONT	15A	Front Deicer Relay
ECU 5	E5	20A	[G4KH] PCM (E-CVVT Relay)
IG 1	IG 1	40A	PDM (IG1) Relay, PDM (ACC) Relay, Ignition Switch
SENSOR 4	S4	10A	[D4HA/D4HB] Sub Junction Block (RLY. 2), Mass Air Flow Sensor [G4KJ/G4KH/G4KE] Oxygen Sensor (Up/Down) [G6DF] PCM, Oxygen Sensor #1/#2/#3/#4

Description	Symbol	Fuse rating	Protected component
SENSOR 5	S5	15A	[D4HA/D4HB] PM (Particulate Matter) Sensor, EGR Cooling Bypass Solenoid Valve [G4KJ/G4KH/G4KE] PCM
POWER OUTLET 3	3 POWER OUTLET	20A	Rear Power Outlet
SENSOR 1	S1	20A	[D4HA/D4HB] ECM [G4KJ/G4KH] Ignition Coil #1/#2/#3/#4 [G4KE] Ignition Coil #1/#2/#3/#4, Condecser [G6DF] Ignition Coil #1/#2/#3/#4/#5/#6, Condecser #1/#2
SENSOR 3	S3	10A	[D4HA/D4HB] Fuel Pump Relay, Stop Lamp Switch, Oil Temperature Sensor & Pressure Switch (Europe & Euro VI), Oil Level Sensor & Pressure Switch (Russia, Europe & Except Euro VI) [G4KJ/G4KE] Fuel Pump Relay, Oil Level Sensor (G4KJ) [G6DF] Fuel Pump Relay, PCM, Injector #1/#2/#3/#4/#5/#6
DEFOGGER		40A	Rear Defogger Relay
SENSOR 2	S2	10A	[D4HA/D4HB] E/R Junction Block (RLY. 2/RLY. 3), Lambda Sensor #1/#2, Crankshaft Position Sensor, Electronic VGT Actuator, Fuel Pressure Regulating Valve, Rail Pressure Regulating Valve [G4KJ/G4KH] E/R Junction Block (RLY. 2/RLY. 3), Oil Control Valve (Exhaust), Purge Control Solenoid Valve, RCV Control Solenoid Valve, Variable Intake Solenoid Valve (G4KJ) [G4KE] E/R Junction Block (RLY. 2/RLY. 3), Oil Control Valve #1/#2 (Intake/Exhaust), Purge Control Solenoid Valve, Injector #1/#2/#3/#4, Variable Intake Solenoid Valve, Crankshaft Position Sensor, Camshaft Position Sensor #1/#2 (Intake/Exhaust) [G6DF] E/R Junction Block (RLY. 2/RLY. 3), Variable Intake Solenoid Valve #1/#2, Purge Control Solenoid Valve, Oil Control Valve #1/#2/#3/#4 (Intake/Exhaust)

Description	Symbol	Fuse rating	Protected component
FUEL PUMP	FUEL PUMP	20A	Fuel Pump Relay
HORN		15A	Horn Relay
B/A HORN		10A	Burglar Alarm Horn Relay

Relay NO.	Symbol	Relay Name	Type
E33		START RELAY	MICRO
E34	A/C	Blower Relay (RLY. 1)	MICRO
E35		Cooling Fan #2 Relay (RLY. 2)	MICRO
E36		Cooling Fan #1 Relay (RLY. 3)	MINI

Engine compartment fuse panel (Battery terminal cover)



OUM078283L

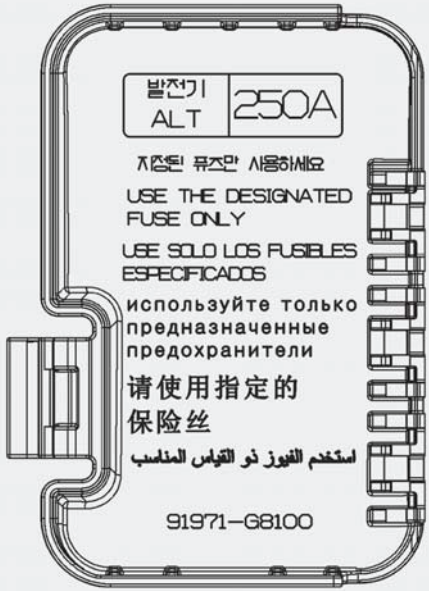

OUM078284L

LIGHT BULBS

Please prepare lamps with appropriate standards in case of emergencies. (Refer to chapter 9 for further information)

When changing lamps and sorts, first turn off the engine at a safe place, firmly apply the side brake and take out the battery's negative (-) terminal.

⚠ WARNING - Working on the lights

Prior to working on the light, firmly apply the parking brake, ensure that the ignition switch is turned to the LOCK position and turn off the lights to avoid sudden movement of the vehicle and burning your fingers or receiving an electric shock.

Use only the bulbs of the specified wattage.

⚠ WARNING

Be sure to replace the burned-out bulb with one of the same wattage rating. Otherwise, it may cause extensive wiring damage and possible fire.

⚠ CAUTION

If you don't have necessary tools, the correct bulbs and the expertise, consult a professional workshop. Kia recommends to consult an authorised Kia dealer/service partner. In many cases, it is difficult to replace vehicle light bulbs because other parts of the vehicle must be removed before you can get to the bulb. This is especially true if you have to remove the headlight assembly to get to the bulb(s). Removing/ installing the headlight assembly can result in damage to the vehicle.

⚠ CAUTION

- ***If unauthentic parts or sub-standard lights are used when changing lights, it may lead to fuse disconnection and malfunction, and other wiring damages.***
- ***Do not install extra lamps or LED to the vehicle. If supplementary lights are installed, it may lead to lamp malfunction and flickering of the lights. In addition, the fuse box and other writing may be damaged.***

■ Lamp part malfunction due to net-work failure

The headlamp, taillight, and fog light may lit up when the head lamp switch is turned ON, and not light up when the taillight or for light switch is turned ON. This may be cause by network failure or vehicle electrical control system malfunction. If there is a problem, have the system serviced by a professional workshop. Kia recommends to visit an authorised Kia dealer/service partner.

■ **Lamp part malfunction due to electrical control system stabilization**

A normally functioning lamp may licker momentarily. This momentary occurrence is due to stabilization function of the vehicle's electrical control system. If the lamp soon returns to normal, the vehicle does not require service. However, if the lamp goes out after the momentary flickering, or the flickering continues, have the system serviced by a professional workshop. Kia recommends to visit an authorised Kia dealer/service partner

✻ NOTICE

- **If the light bulb or lamp connector is removed from an operating lamp activated by electricity, the fuse box's electronic device may scan it as a malfunction. Therefore, a lamp malfunction history may be recorded in Diagnostic Trouble Code (DTC) in the fuse box.**
- **It is normal for an operating lamp may blink temporarily. Since this occurrence is due stabilization function of the vehicle's electronic control device, if the lamp lights up normally after temporary blinking, there is no problem in the vehicle.**
  However, if the lamp continues to blink several times or turn off completely, there may be an error in the vehicle's electronic control device. In this case, have the vehicle checked by a professional workshop immediately. Kia recommends to visit an authorised Kia dealer/service partner.

✻ NOTICE

After an accident or after the headlight assembly is reinstalled, have the headlight aiming adjusted by a professional workshop. Kia recommends to visit an authorised Kia dealer/service partner.

✻ NOTICE

You can find moisture inside the lens of lamps after a car wash or driving in the rain. It is a natural event caused by the temperature difference between the inside and the outside of the lamp and does not mean a problem with its functions. The moisture inside the lamp would disappear if you drive the vehicle with the headlamp turned on, however, the level at which the moisture is removed may differ depending on the size / location / condition of the lamp. If the moisture continues to stay inside the lamp, Kia recommends visiting an authorized Kia dealer/service partner.

Light bulb position (Front)

■ Head lamp – Type B

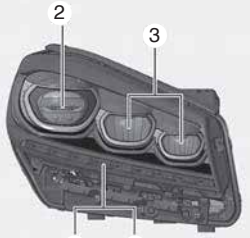

OUM078218L

■ Fog lamp - Type B



OUM078220L

(1) Position lamp / Day time running lamp (LED type)
(2) Headlamp (Low/High) (LED type)
(3) Headlamp (Low Assist) (LED type)
(4) Front turn signal lamp (LED type)
(5) Position lamp / Day time running lamp (LED type)
(6) Front fog lamp (LED type)

Light bulb position (Rear)

Rear combination lamp - Type B



OUM078222L

■ Rear Fog lamp

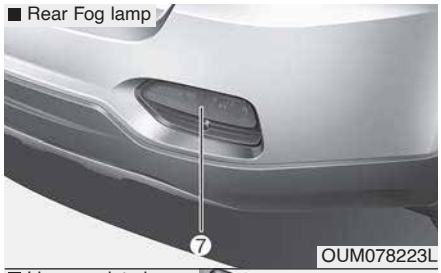

OUM078223L

■ License plate lamp

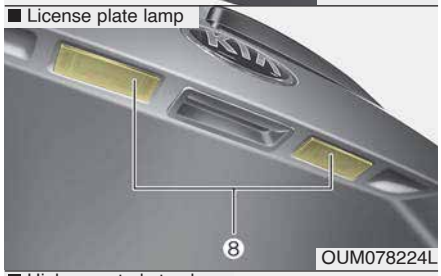

OUM078224L

■ High mounted stop lamp

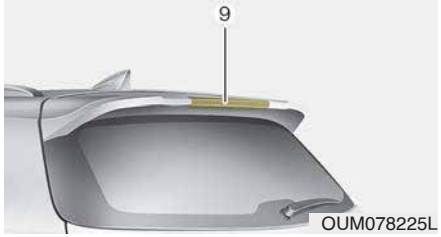

OUM078225L

(1) Stop and tail lamp (Bulb)
(2) Tail lamp (Bulb)
(3) Rear turn signal lamp (Bulb)
(4) Back Up lamp (Bulb)
(5) Tail lamp (LED type)
(6) Stop and tail lamp (LED type)
(7) Rear fog lamp (Bulb type)
(8) License plate lamp (Bulb type)
(9) High mounted stop lamp (LED type)

Headlamp (LED type) replacement (Headlamp Type B)



OUM078230L

If the Low/High beam lamp(1,2), Front turn signal lamp(3), Day time running lamp/Position lamp(4) does not operate, have your vehicle checked by a professional workshop.

Kia recommends to visit an authorised Kia dealer/service partner.

The LED lamps cannot be replaced as a single unit because it is an integrated unit. The LED lamps has to be replaced with the unit.

A skilled technician should check or repair the head lamp (LED), for it may damage related parts of the vehicle.

Side repeater lamp (LED type) bulb replacement



OUM078250R

If the side repeater lamp (LED) (1), does not operate, have your vehicle checked by a professional workshop.

Kia recommends to visit an authorised Kia dealer/service partner.

The LED lamps cannot be replaced as a single unit because it is an integrated unit. The LED lamps has to be replaced with the unit.

A skilled technician should check or repair the side repeater lamp (LED), for it may damage related parts of the vehicle.

Stop and tail lamp (Bulb type) bulb replacement


OUM074031

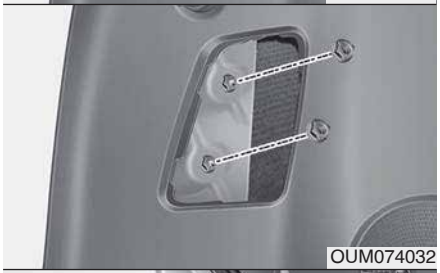
OUM074032


OUM078033L

1. Open the tailgate.
2. Open the service cover.
3. Remove the nuts from the vehicle.
4. Remove the rear combination lamp assembly from the body of the vehicle.
5. Disconnect the rear combination lamp connector.

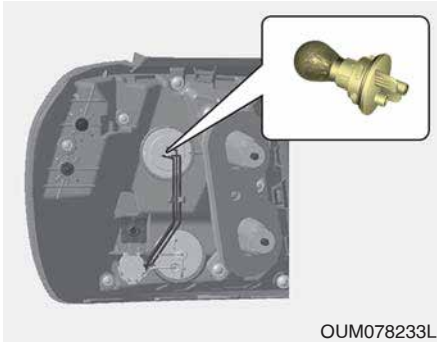
OUM078233L

6. Remove the socket from the assembly by turning the socket counterclockwise until the tabs on the socket align with the slots on the assembly.
7. Remove the bulb from the socket by pressing it in and rotating it counterclockwise until the tabs on the bulb align with the slots in the socket. Pull the bulb out of the socket.
8. Insert a new bulb by inserting it into the socket and rotating it until it locks into place.

9. Install the socket in the assembly by aligning the tabs on the socket with the slots in the assembly. Push the socket into the assembly and turn the socket clockwise.
10. Install the rear combination lamp assembly to the body of the vehicle.
11. Install the service cover.

Rear turn signal lamp (Bulb type) bulb replacement


OUM074031

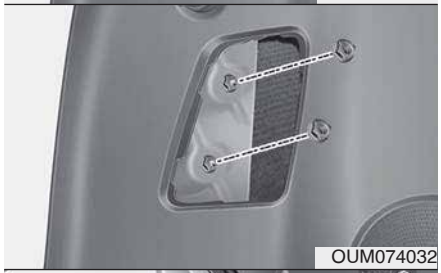
OUM074032


OUM078033L

1. Open the tailgate.
2. Open the service cover.
3. Remove the nuts from the vehicle.
4. Remove the rear combination lamp assembly from the body of the vehicle.
5. Disconnect the rear combination lamp connector.

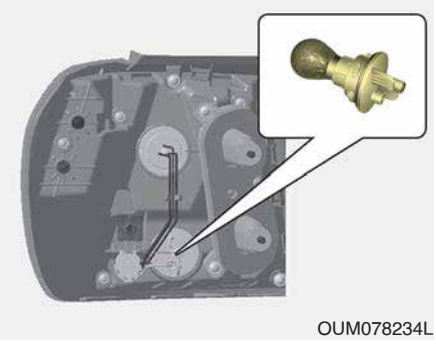
OUM078234L

6. Remove the socket from the assembly by turning the socket counterclockwise until the tabs on the socket align with the slots on the assembly.
7. Remove the bulb from the socket by pressing it in and rotating it counterclockwise until the tabs on the bulb align with the slots in the socket. Pull the bulb out of the socket.
8. Insert a new bulb by inserting it into the socket and rotating it until it locks into place.
9. Install the socket in the assembly by aligning the tabs on the socket with the slots in the assembly. Push the socket into the assembly and turn the socket clockwise.
10. Install the rear combination lamp assembly to the body of the vehicle.
11. Install the service cover.

Tail lamp (inside) (Bulb type) bulb replacement

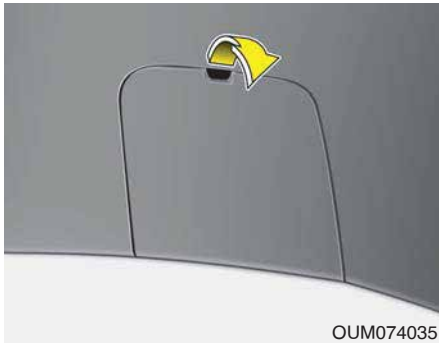
OUM074035

1. Open the tailgate.
2. Remove the service cover.

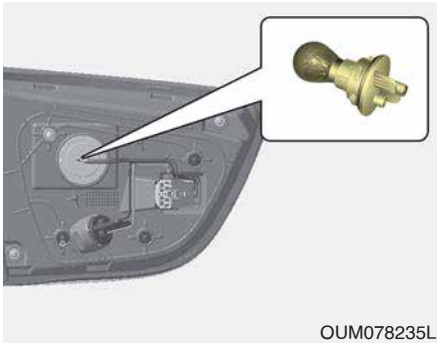
OUM078235L

3. Remove the socket from the assembly by turning the socket counterclockwise until the tabs on the socket align with the slots on the assembly.
4. Remove the bulb from the socket by pressing it in and rotating it counterclockwise until the tabs on the bulb align with the slots in the socket. Pull the bulb out of the socket.
5. Insert a new bulb by inserting it into the socket and rotating it until it locks into place.
6. Install the socket in the assembly by aligning the tabs on the socket with the slots in the assembly. Push the socket into the assembly and turn the socket clockwise.
7. Install the service cover.

Back up lamp (Bulb type) bulb replacement

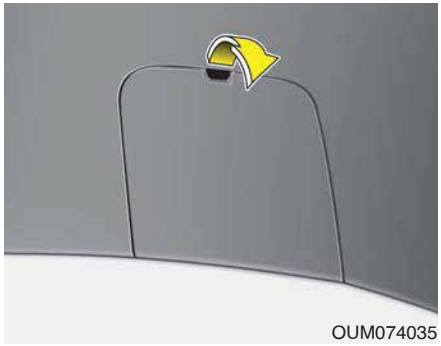
OUM074035

1. Open the tailgate.
2. Remove the service cover.

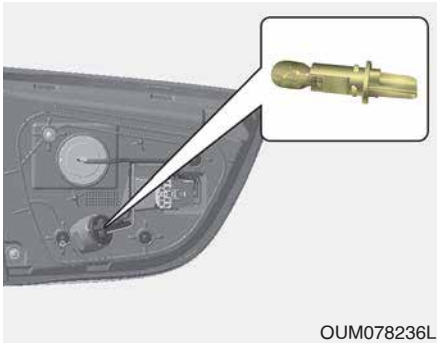
OUM078236L

3. Remove the socket from the assembly by turning the socket counterclockwise until the tabs on the socket align with the slots on the assembly.
4. Remove the bulb from bulb-socket by pulling it out.
5. Insert a new bulb by inserting it into the bulb-socket.
6. Install the socket in the assembly by aligning the tabs on the socket with the slots in the assembly. Push the socket into the assembly and turn the socket clockwise.
7. Install the service cover.

Stop and tail lamp (LED type) bulb replacement



OUM078237L

If the stop and tail lamp (LED) (1,2), does not operate, have your vehicle checked by a professional workshop.

Kia recommends to visit an authorised Kia dealer/service partner.

The LED lamps cannot be replaced as a single unit because it is an integrated unit. The LED lamps has to be replaced with the unit.

A skilled technician should check or repair the stop and tail lamp (LED), for it may damage related parts of the vehicle.

Rear fog lamp bulb replacement



OUM078238L

If the rear fog lamp (1) does not operate, have your vehicle checked by a professional workshop. Kia recommends to visit an authorised Kia dealer/service partner.

High mounted stop lamp bulb replacement



If the high mounted stop lamp (1) does not operate, have your vehicle checked by a professional workshop. Kia recommends to visit an authorised Kia dealer/service partner.

License plate lamp bulb replacement

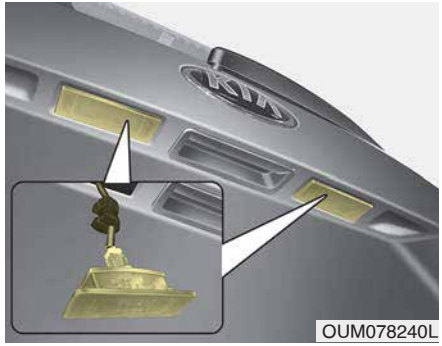

1. Remove the lamp assembly by using a flat-blade screwdriver.
2. Remove the socket from the assembly by turning the socket counterclockwise until the tabs on the socket align with the slots on the assembly.
3. Remove the bulb from bulb-socket by pulling it out.
4. Insert a new bulb by inserting it into the bulb-socket.
5. Install the socket in the assembly by aligning the tabs on the socket with the slots in the assembly. Push the socket into the assembly and turn the socket clockwise.
6. Install the lamp assembly to the lamp housing.

Door courtesy lamp bulb replacement

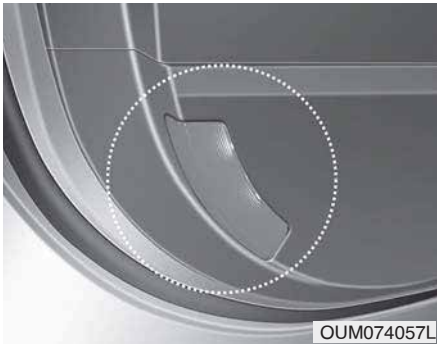
OUM074057L

If the door courtesy lamp does not operate, have your vehicle checked by a professional workshop. Kia recommends to visit an authorised Kia dealer/service partner.

Map lamp (Bulb type) bulb replacement

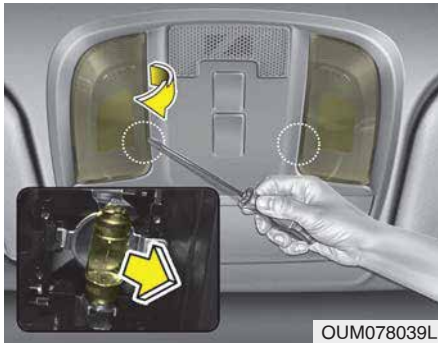
OUM078039L

⚠ WARNING

Prior to working on the Interior lamps, ensure that the "OFF" button is depressed to avoid burning your fingers or receiving an electric shock.

1. Using a flat-blade screwdriver, gently pry the lens cover from lamp housing.
2. Remove the bulb by pulling it straight out.
3. Install a new bulb in the socket.
4. Align the lens cover tabs with the lamp housing notches and snap the lens into place.

⚠ CAUTION

Be careful not to dirty or damage the lens, lens tab, and plastic housings.

Map lamp (LED type) bulb replacement

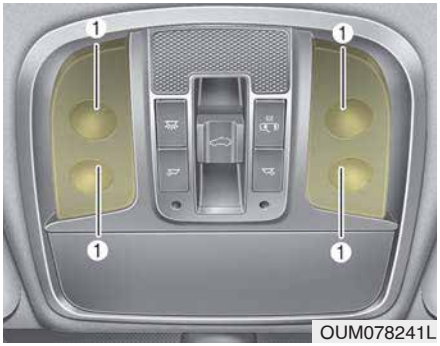

OUM078241L

If the map lamp (LED) (1), does not operate, have your vehicle checked by a professional workshop.

Kia recommends to visit an authorised Kia dealer/service partner.

The LED lamps cannot be replaced as a single unit because it is an integrated unit. The LED lamps has to be replaced with the unit.

A skilled technician should check or repair the map lamp (LED), for it may damage related parts of the vehicle.

Room lamp bulb replacement

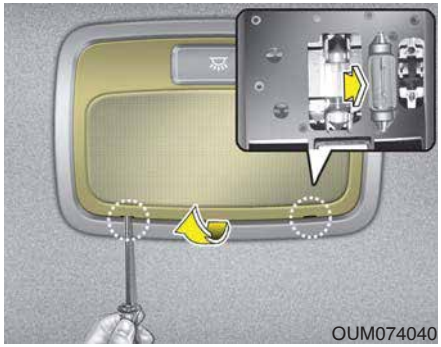
OUM074040

⚠ WARNING

Prior to working on the Interior lamps, ensure that the "OFF" button is depressed to avoid burning your fingers or receiving an electric shock.

1. Using a flat-blade screwdriver, gently pry the lens cover from lamp housing.
2. Remove the bulb by pulling it straight out.
3. Install a new bulb in the socket.
4. Align the lens cover tabs with the lamp housing notches and snap the lens into place.

⚠ CAUTION

Be careful not to dirty or damage the lens, lens tab, and plastic housings.

Personal lamp (LED type) bulb replacement



If the personal lamp (LED) (1), does not operate, have your vehicle checked by a professional workshop.

Kia recommends to visit an authorised Kia dealer/service partner.

The LED lamps cannot be replaced as a single unit because it is an integrated unit. The LED lamps has to be replaced with the unit.

A skilled technician should check or repair the personal lamp (LED), for it may damage related parts of the vehicle.

Glove box lamp replacement

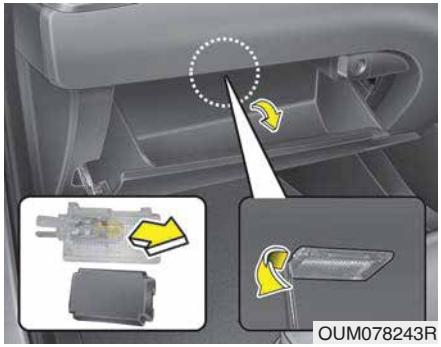

1. Using a flat-blade screwdriver, gently pry the lamp assembly from interior.
2. Remove the cover from the lamp assembly.
3. Remove the bulb by pulling it straight out.
4. Install a new bulb in the socket.
5. Install the cover to the lamp assembly.
6. Install the lamp assembly to interior.

⚠ CAUTION

Be careful not to dirty or damage the lens, lens tab, and plastic housings.

Luggage lamp bulb replacement

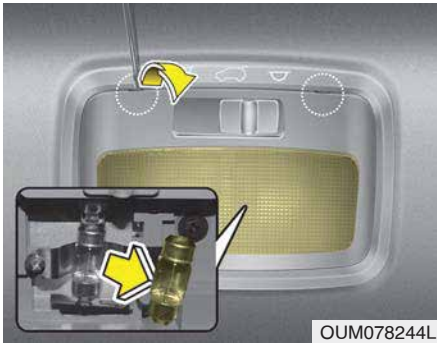
OUM078244L

⚠ WARNING

Prior to working on the Interior lamps, ensure that the "OFF" button is depressed to avoid burning your fingers or receiving an electric shock.

1. Using a flat-blade screwdriver, gently pry the lens cover from lamp housing.
2. Remove the bulb by pulling it straight out.
3. Install a new bulb in the socket.
4. Align the lens cover tabs with the lamp housing notches and snap the lens into place.

⚠ CAUTION

Be careful not to dirty or damage the lens, lens tab, and plastic housings.

Vanity mirror lamp bulb replacement


OUM078254R

⚠ WARNING

Prior to working on the Interior lamps, ensure that the "OFF" button is depressed to avoid burning your fingers or receiving an electric shock.

1. Using a flat-blade screwdriver, gently pry the lamp assembly from interior.
2. Remove the bulb by pulling it straight out.
3. Install a new bulb in the socket.
4. Install the lamp assembly to interior.

⚠ CAUTION

Be careful not to dirty or damage the lens, lens tab, and plastic housings.

Headlight and front fog light aiming

Headlight aiming

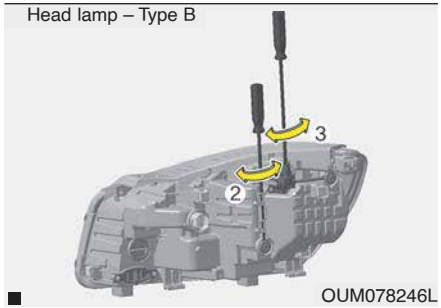

1. Inflate the tyres to the specified pressure and remove any loads from the vehicle except the driver, spare tyre, and tools.
2. The vehicle should be placed on a flat floor.
3. Draw vertical lines (Vertical lines passing through respective head lamp centres) and a horizontal line (Horizontal line passing through centre of head lamps) on the screen.
4. With the head lamp and battery in normal condition, aim the head lamps so the brightest portion falls on the horizontal and vertical lines.
5. To aim the high beam up and down, turn the driver (1) clockwise or counterclockwise. To aim the low beam up and down, turn the driver (2) clockwise or counterclockwise. To aim the low beam left and right, turn the driver (3) clockwise or counterclockwise.

Front fog light aiming

■ Fog lamp - Type B

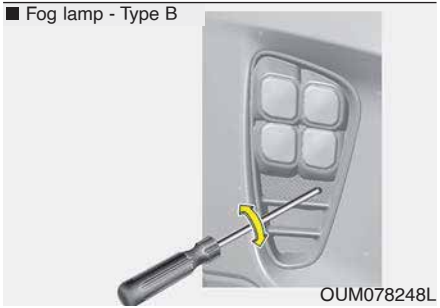

OUM078248L

The front fog lamp can be aimed as the same manner of the head lamps aiming.

With the front fog lamps and battery normal condition, aim the front fog lamps. To aim the front fog lamp up or down, turn the driver clockwise or counterclockwise.

Front fog lamp bulb replacement

■ Fog lamp - Type A

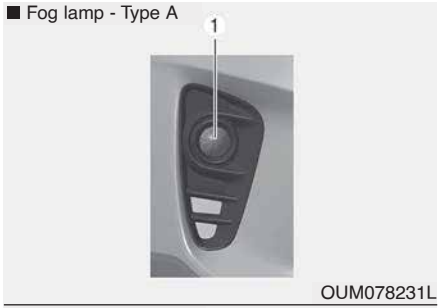

OUM078231L

■ Fog lamp - Type B

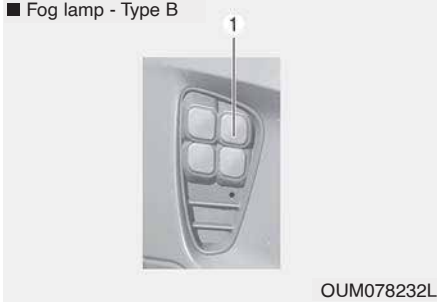

OUM078232L

If the front fog lamp (1) does not operate, have your vehicle checked by a professional workshop. Kia recommends to visit an authorised Kia dealer/service partner.

Aiming point

<Ground Height>

<Distance between lamps>

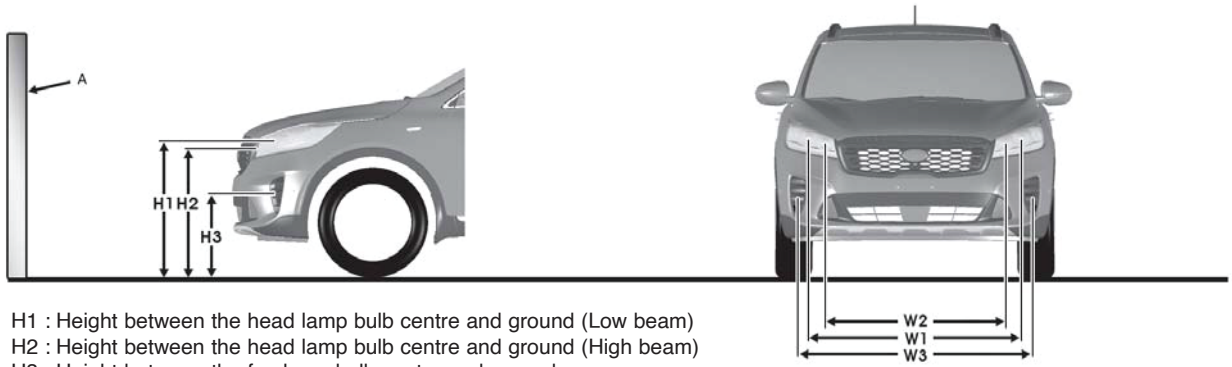

H1 : Height between the head lamp bulb centre and ground (Low beam)
H2 : Height between the head lamp bulb centre and ground (High beam)
H3 : Height between the fog lamp bulb centre and ground
W1 : Distance between the two head lamp bulbs centres (Low beam)
W2 : Distance between the two head lamp bulbs centres (High beam)
W3 : Distance between the two fog lamp bulbs centres
A : Screen

OUM078107L

vehicle condition	Head lamp (Led Type)			
	Ground Height		Distance between lamps	
	Low beam H1'	High beam H2'	Low beam W1'	High beam W2'
Without driver [mm (in)]	912 (35.9)	912 (35.9)	1,554 (61.2)	1,554 (61.2)
With driver [mm (in)]	905 (35.6)	905 (35.6)	1,554 (61.2)	1,554 (61.2)

Unit: mm (in)

vehicle condition	Front Fog lamp (Led Type)	
	Ground Height	Distance between lamps
	H3'	W3'
Without driver [mm (in)]	564 (22.2)	1,560 (61.4)
With driver [mm (in)]	557 (22.0)	1,560 (61.4)

■ Based on 10m screen

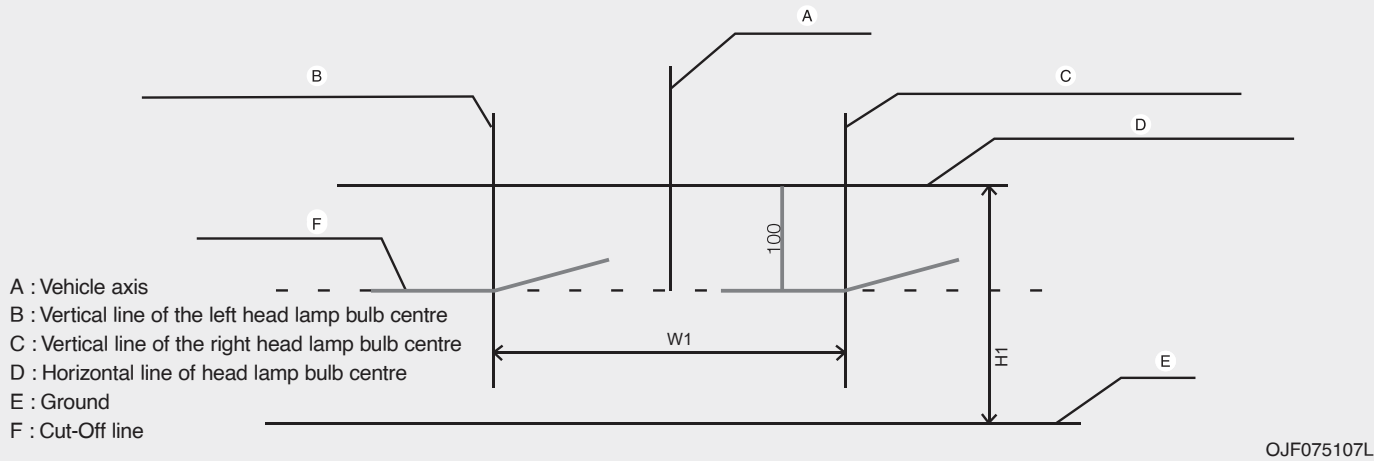

Head lamp low beam (LHD Vehicle)

1. Turn the low beam on without driver aboard.
2. The cut-off line should be projected in the cut-off line shown in the picture.
3. When aiming the low beam, vertical aiming should be adjusted after adjusting the horizontal aiming.
4. If head lamp levelling device is equipped, adjust the head lamp levelling device switch with 0 positions.

■ Based on 10m screen

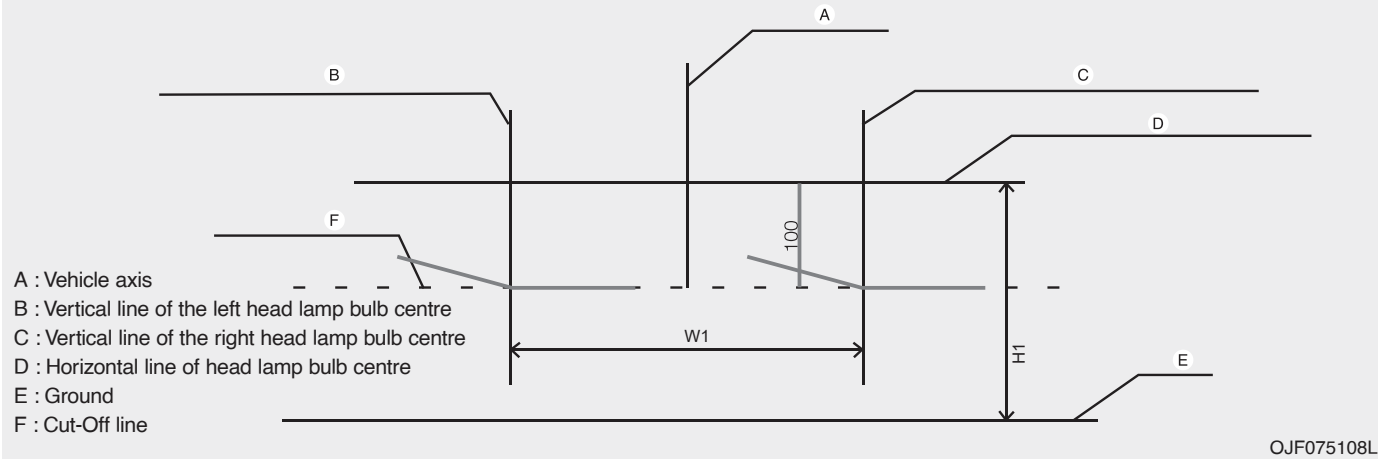

Head lamp low beam (RHD Vehicle)

1. Turn the low beam on without driver aboard.
2. The cut-off line should be projected in the cut-off line shown in the picture.
3. When aiming the low beam, vertical aiming should be adjusted after adjusting the horizontal aiming.
4. If head lamp levelling device is equipped, adjust the head lamp levelling device switch with 0 positions.

■ Based on 10m screen

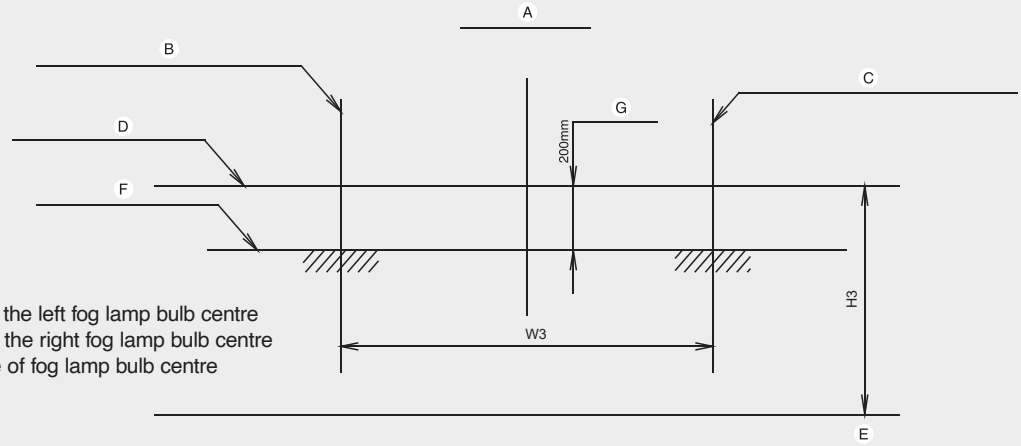

A : Vehicle axis
B : Vertical line of the left fog lamp bulb centre
C : Vertical line of the right fog lamp bulb centre
D : Horizontal line of fog lamp bulb centre
E : Ground
F : Cut-Off line
G : Upper limit

OYB076080

Front fog lamp

1. Turn the front fog lamp on without the driver aboard.
2. The cut-off line should be projected in the allowable range (shaded region).

APPEARANCE CARE

Exterior care

Exterior general caution

It is very important to follow the label directions when using any chemical cleaner or polish. Read all warning and caution statements that appear on the label.

Finish maintenance

Washing

To help protect your vehicle's finish from rust and deterioration, wash it thoroughly and frequently at least once a month with lukewarm or cold water.

If you use your vehicle for off-road driving, you should wash it after each off-road trip. Pay special attention to the removal of any accumulation of salt, dirt, mud, and other foreign materials. Make sure the drain holes in the lower edges of the doors and rocker panels are kept clear and clean.

Insects, tar, tree sap, bird droppings, industrial pollution and similar deposits can damage your vehicle's finish if not removed immediately.

Even prompt washing with plain water may not completely remove all these deposits. A mild soap, safe for use on painted surfaces, may be used.

After washing, rinse the vehicle thoroughly with lukewarm or cold water. Do not allow soap to dry on the finish.

⚠ CAUTION

- ***Do not use strong soap, chemical detergents or hot water, and do not wash the vehicle in direct sunlight or when the body of the vehicle is warm.***
- ***Be careful when washing the side windows of your vehicle.***

  Especially, with high-pressure water, water may leak through the windows and wet the interior.
- ***To prevent damage to the plastic parts and lamps, do not clean with chemical solvents or strong detergents.***

⚠ WARNING - Wet brakes

After washing the vehicle, test the brakes whilst driving slowly to see if they have been affected by water. If braking performance is impaired, dry the brakes by applying them lightly whilst maintaining a slow forward speed.

High-pressure washing

- When using high-pressure washers, make sure to maintain sufficient distance from the vehicle.

  Insufficient clearance or excessive pressure can lead to component damage or water penetration.
- Do not spray the camera, sensors or its surrounding area directly with a high pressure washer. Shock applied from high pressure water may cause the device to not operate normally.
- Do not bring the nozzle tip close to boots (rubber or plastic covers) or connectors as they may be damaged if they come into contact with high pressure water.


OUM078249L

⚠ CAUTION

- ***Water washing in the engine compartment including high pressure water washing may cause the failure of electrical circuits located in the engine compartment.***
- ***Never allow water or other liquids to come in contact with electrical/electronic components inside the vehicle as this may damage them.***

Waxing

Wax the vehicle when water will no longer bead on the paint.
Always wash and dry the vehicle before waxing. Use a good quality liquid or paste wax, and follow the manufacturer's instructions. Wax all metal trim to protect it and to maintain its luster.
Removing oil, tar, and similar materials with a spot remover will usually strip the wax from the finish. Be sure to re-wax these areas even if the rest of the vehicle does not yet need waxing.
Do not apply wax on embossed unpainted unit, as it may tarnish the unit.

⚠ CAUTION

- ***Wiping dust or dirt off the body with a dry cloth will scratch the finish.***
- ***Do not use steel wool, abrasive cleaners, acid detergents or strong detergents containing high alkaline or caustic agents on chrome-plated or anodized aluminum parts. This may result in damage to the protective coating and cause discoloration or paint deterioration.***

Finish damage repair

Deep scratches or stone chips in the painted surface must be repaired promptly. Exposed metal will quickly rust and may develop into a major repair expense.

✻ NOTICE

If your vehicle is damaged and requires any metal repair or replacement, be sure the body shop applies anti-corrosion materials to the parts repaired or replaced.

Bright-metal maintenance

- To remove road tar and insects, use a tar remover, not a scraper or other sharp object.
- To protect the surfaces of bright-metal parts from corrosion, apply a coating of wax or chrome preservative and rub to a high luster.
- During winter weather or in coastal areas, cover the bright metal parts with a heavier coating of wax or preservative. If necessary, coat the parts with non-corrosive petroleum jelly or other protective compound.

Underbody maintenance

Corrosive materials used for ice and snow removal and dust control may collect on the underbody. If these materials are not removed, accelerated rusting can occur on underbody parts such as the fuel lines, frame, floor pan and exhaust system, even though they have been treated with rust protection.

Thoroughly flush the vehicle underbody and wheel openings with lukewarm or cold water once a month, after off-road driving and at the end of each winter. Pay special attention to these areas because it is difficult to see all the mud and dirt. It will do more harm than good to wet down the road grime without removing it. The lower edges of the doors, rocker panels, and frame members have drain holes that should not clog with dirt; trapped water in these areas can cause rusting.

⚠ WARNING

After washing the vehicle, test the brakes whilst driving slowly to see if they have been affected by water. If braking performance is impaired, dry the brakes by applying them lightly whilst maintaining a slow forward speed.

Aluminum wheel maintenance

The aluminum wheels are coated with a clear protective finish.

- Do not use any abrasive cleaner, polishing compound, solvent, or wire brushes on aluminum wheels. They may scratch or damage the finish.
- Clean the wheel when it has cooled.
- Use only a mild soap or neutral detergent, and rinse thoroughly with water. Also, be sure to clean the wheels after driving on salted roads. This helps prevent corrosion.
- Avoid washing the wheels with high-speed car wash brushes.
- Do not use any alkaline or acid detergent. It may damage and corrode the aluminum wheels coated with a clear protective finish.

Corrosion protection

Protecting your vehicle from corrosion

By using the most advanced design and construction practices to combat corrosion, we produce vehicles of the highest quality. However, this is only part of the job. To achieve the long-term corrosion resistance your vehicle can deliver, the owner's cooperation and assistance is also required.

Common causes of corrosion

The most common causes of corrosion on your vehicle are:

- Road salt, dirt and moisture that is allowed to accumulate underneath the vehicle.
- Removal of paint or protective coatings by stones, gravel, abrasion or minor scrapes and dents which leave unprotected metal exposed to corrosion.

High-corrosion areas

If you live in an area where your vehicle is regularly exposed to corrosive materials, corrosion protection is particularly important. Some of the common causes of accelerated corrosion are road salts, dust control chemicals, ocean air and industrial pollution.

Moisture breeds corrosion

Moisture creates the conditions in which corrosion is most likely to occur. For example, corrosion is accelerated by high humidity, particularly when temperatures are just above freezing. In such conditions, the corrosive material is kept in contact with the vehicle's surface by moisture that evaporate slowly.
Mud is particularly corrosive because it dries slowly and holds moisture in contact with the vehicle. Although the mud appears to be dry, it can still retain moisture and promote corrosion.
High temperatures can also accelerate corrosion of parts that are not properly ventilated so the moisture can be dispersed.

For all these reasons, it is particularly important to keep your vehicle clean and free of mud or accumulations of other materials. This applies not only to the visible surfaces but particularly to the underside of the vehicle.

To help prevent corrosion

You can help prevent corrosion from getting started by observing the following:

Keep your vehicle clean

The best way to prevent corrosion is to keep your vehicle clean and free of corrosive materials. Attention to the underside of the vehicle is particularly important.

- If you live in a high-corrosion area — where road salts are used, near the ocean, areas with industrial pollution, acid rain, etc.—, you should take extra care to prevent corrosion. In winter, hose off the underside of your vehicle at least once a month and be sure to clean the underside thoroughly when winter is over.
- When cleaning underneath the vehicle, give particular attention to the components under the fenders and other areas that are hidden from view. Do a thorough job; just dampening the accumulated mud rather than washing it away will accelerate corrosion rather than prevent it. Water under high pressure and steam are particularly effective in removing accumulated mud and corrosive materials.
- When cleaning lower door panels, rocker panels and frame members, be sure that drain holes are kept open so that moisture can escape and not be trapped inside to accelerate corrosion.

Keep your garage dry

Don't park your vehicle in a damp, poorly ventilated garage. This creates a favorable environment for corrosion. This is particularly true if you wash your vehicle in the garage or drive it into the garage when it is still wet or covered with snow, ice or mud. Even a heated garage can contribute to corrosion unless it is well ventilated so moisture is dispersed.

Keep paint and trim in good condition

Scratches or chips in the finish should be covered with "touch-up" paint as soon as possible to reduce the possibility of corrosion. If bare metal is showing through, the attention of a qualified body and paint shop is recommended.

Bird droppings : Bird droppings are highly corrosive and may damage painted surfaces in just a few hours. Always remove bird droppings as soon as possible.

Don't neglect the interior

Moisture can collect under the floor mats and carpeting and cause corrosion. Check under the mats periodically to be sure the carpeting is dry. Use particular care if you carry fertilizers, cleaning materials or chemicals in the vehicle.

These should be carried only in proper containers and any spills or leaks should be cleaned up, flushed with clean water and thoroughly dried.

Interior care

Interior general precautions

Prevent chemicals such as perfume, cosmetic oil, sun cream, hand cleaner, and air freshener from contacting the interior parts because they may cause damage or discoloration. If they do contact the interior parts, wipe them off immediately. If necessary, use a vinyle cleaner, see instructions for correct usage.

⚠ CAUTION

Never allow water or other liquids to come in contact with electrical/electronic components inside the vehicle as this may damage them.

⚠ CAUTION

When cleaning leather products (steering wheel, seats etc.), use neutral detergents or low alcohol content solutions. If you use high alcohol content solutions or acid/alkaline detergents, the colour of the leather may fade or the surface may get stripped off.

Taking care of leather seats

- Vacuum the seat periodically to remove dust and sand on the seat. It will prevent abrasion or damage of the leather and maintain its quality.
- Wipe the natural leather seat cover often with dry or soft cloth.
- Sufficient use of a leather protective may prevent abrasion of the cover and helps maintain the colour.

  Be sure to read the instructions and consult a specialist when using leather coating or protective agents.
- Leather with bright colours (beige, cream beige) is easily contaminated and clear in appearance. Clean the seats frequently.
- Avoid wiping with wet cloth. It may cause the surface to crack.

Cleaning the leather seats

- Remove all contaminations instantly. Refer to instructions below for removal of each contaminant.
- Cosmetic products(sunscreen, foundation, etc.)
  - Apply cleansing cream on a cloth and wipe the contaminated point. Wipe off the cream with a wet cloth and remove water with a dry cloth.
- Beverages(coffee, soft drink, etc.)
  - Apply a small amount of neutral detergent and wipe until contaminations do not smear.
- Oil
  - Remove oil instantly with absorbable cloth and wipe with stain remover for natural leather only.
- Chewing gum
  - Harden the gum with ice and remove gradually.

Fabric seat cover (If equipped)

Please clean the fabric seats regularly with a vacuum cleaner in consideration of fabric material characteristics. If they are heavily soiled with beverage stains, etc., use a suitable interior cleaner. To prevent damage to seat covers, wipe off the seat covers down to the seams with a large wiping motion and moderate pressure using a soft sponge or microfiber cloth.

Velcro closures on clothing or sharp objects may cause snagging or scratches on the surface of the seats. Make sure not to rub such objects against the surface.

Cleaning the upholstery and interior trim

Vinyl

Remove dust and loose dirt from vinyl with a whisk broom or vacuum cleaner. Clean vinyl surfaces with a vinyl cleaner.

Fabric

Remove dust and loose dirt from fabric with a whisk broom or vacuum cleaner. Clean with a mild soap solution recommended for upholstery or carpets. Remove fresh spots immediately with a fabric spot cleaner. If fresh spots do not receive immediate attention, the fabric can be stained and its colour can be affected. Also, its fire-resistant properties can be reduced if the material is not properly maintained.

⚠ CAUTION

Using anything but recommended cleaners and procedures may affect the fabric's appearance and fire-resistant properties.

Cleaning the lap/shoulder belt webbing

Clean the belt webbing with any mild soap solution recommended for cleaning upholstery or carpet. Follow the instructions provided with the soap. Do not bleach or re-dye the webbing because this may weaken it.

Cleaning the interior window glass

If the interior glass surfaces of the vehicle become fogged (that is, covered with an oily, greasy or waxy film), they should be cleaned with a glass cleaner. Follow the directions on the glass cleaner container.

⚠ CAUTION

Do not scrape or scratch the inside of the rear window. This may result in damage of the rear window defroster grid.

EMISSION CONTROL SYSTEM (IF EQUIPPED)

The emission control system of your vehicle is covered by a written limited warranty. Please see the warranty information contained in the Warranty & Maintenance book in your vehicle.

Your vehicle is equipped with an emission control system to meet all applicable emission regulations.

There are three emission control systems, as follows.

(1) Crankcase emission control system
(2) Evaporative emission control system
(3) Exhaust emission control system

In order to assure the proper function of the emission control systems, have your vehicle inspected and maintained by a professional workshop in accordance with the maintenance schedule in this manual. Kia recommends to visit an authorised Kia dealer/service partner.

Caution for the Inspection and Maintenance Test (With Electronic Stability Control (ESC) system)

- **To prevent the vehicle from misfiring during dynamometer testing, turn the Electronic Stability Control (ESC) system off by pressing the ESC switch.**
- **After dynamometer testing is completed, turn the ESC system back on by pressing the ESC switch again.**

1. Crankcase emission control system

The positive crankcase ventilation system is employed to prevent air pollution caused by blow-by gases being emitted from the crankcase. This system supplies fresh filtered air to the crankcase through the air intake hose. Inside the crankcase, the fresh air mixes with blow-by gases, which then pass through the PCV valve into the induction system.

2. Evaporative emission control system

The Evaporative Emission Control System is designed to prevent fuel vapours from escaping into the atmosphere.

Canister

Fuel vapours generated inside the fuel tank are absorbed and stored in the onboard canister. When the engine is running, the fuel vapours absorbed in the canister are drawn into the surge tank through the purge control solenoid valve.

Purge Control Solenoid Valve (PCSV)

The purge control solenoid valve is controlled by the Engine Control Module (ECM); when the engine coolant temperature is low during idling, the PCSV closes so that evaporated fuel is not taken into the engine. After the engine warms up during ordinary driving, the PCSV opens to introduce evaporated fuel to the engine.

3. Exhaust emission control system

The Exhaust Emission Control System is a highly effective system which controls exhaust emissions whilst maintaining good vehicle performance.

Engine exhaust gas precautions (carbon monoxide)

- Carbon monoxide can be present with other exhaust fumes. Therefore, if you smell exhaust fumes of any kind inside your vehicle, have it inspected and repaired immediately. If you ever suspect exhaust fumes are coming into your vehicle, drive it only with all the windows fully open. Have your vehicle checked and repaired immediately.

⚠ WARNING - Exhaust

Engine exhaust gases contain carbon monoxide (CO). Though colourless and odourless, it is dangerous and could be lethal if inhaled. Follow the instructions on this page to avoid CO poisoning.

- Do not operate the engine in confined or closed areas (such as garages) any more than what is necessary to move the vehicle in or out of the area.
- When the vehicle is stopped in an open area for more than a short time with the engine running, adjust the ventilation system (as needed) to draw outside air into the vehicle.
- Never sit in a parked or stopped vehicle for any extended time with the engine running.
- When the engine stalls or fails to start, excessive attempts to restart the engine may cause damage to the emission control system.

Operating precautions for catalytic converters (if equipped)

⚠ WARNING - Fire

- **A hot exhaust system can ignite flammable items under your vehicle. Do not park the vehicle over or near flammable objects, such as grass, vegetation, paper, leaves, etc.**
- **The exhaust system and catalytic system are very hot whilst the engine is running or immediately after the engine is turned off. Keep away from the exhaust system and catalytic, you may get burned.**

  Also, do not remove the heat sink around the exhaust system, do not seal the bottom of the vehicle or do not coat the vehicle for corrosion control. It may present a fire risk under certain conditions.

Your vehicle is equipped with a catalytic converter emission control device.

Therefore, the following precautions must be observed:

- Use only UNLEADED FUEL for petrol engines.
- Do not operate the vehicle when there are signs of engine malfunction, such as misfire or a noticeable loss of performance.
- Do not misuse or abuse the engine. Examples of misuse are coasting with the ignition off and descending steep grades in gear with the ignition off.
- Do not operate the engine at high idle speed for extended periods (5 minutes or more).
- Do not modify or tamper with any part of the engine or emission control system. All inspections and adjustments must be made by a professional workshop. Kia recommends to visit an authorised Kia dealer/service centre.
- Avoid driving with an extremely low fuel level. Running out of fuel could cause the engine to misfire, damaging the catalytic converter.

Failure to observe these precautions could result in damage to the catalytic converter and to your vehicle.

Additionally, such actions could void your warranties.

Gasoline Particulate Filter (GPF) (if equipped)

The Gasoline Particulate Filter (GPF) is the system that removes the soot from the exhaust gas. Unlike a disposable air filter, the GPF system automatically burns (oxidizes) and removes the accumulated soot while driving.

However, repeated short-distance driving or long-distance driving at a low speed can stop the accumulated soot from automatically being removed by the GPF system. If the accumulated soot reaches a certain amount, the GPF warning light ( ) will illuminate. To re-operate the GPF system, the vehicle should be driven for more than 30 minutes at a speed of 80km/h (50 mph) and faster. Ensure the following conditions are met: safe road conditions, transmission 3 or above, and engine speed of 1,500-4,000 rpm. Driving at 80 km/h (50 mph) or faster for recommended hours will get the GPF system back to work and stop the GPF warning light.

If the GPF warning light stays on or the warning message “Check exhaust system” pops up even after driving at recommended speed and for recommended hours, visit a professional workshop and check the GPF system. Kia recommends to visit an authorized Kia dealer/service partner. Constant driving with the GPF warning light on can damage the GPF system and undermine fuel economy.

Specifications & Consumer information

Dimensions 9-2
Engine 9-2
Gross vehicle weight 9-3
Luggage volume 9-4
Air conditioning system 9-3
bulb wattage 9-4
Tyres and wheels 9-5
Recommended lubricants and capacities 9-6
Recommended SAE viscosity number 9-9
Vehicle identification number (VIN) 9-10
Vehicle certification label 9-11
Tyre specification and pressure label 9-11
Engine number 9-11
Declaration of conformity 9-12
Refrigerant label 9-12
Air conditioner compressor label 9-12
Fuel label 9-13

DIMENSIONS

ITEM			7 Seater
Overall length			4,800mm (189.0 in)
Overall width			1,890 mm (74.4 in)
Overall height	Without Roof rack		1,685 mm (66.3 in)
	With Roof rack		1,690 mm (66.5 in)
Tread	Front	235/65 R17	1,633 mm (64.2 in)
		235/60 R18	1,628 mm (64.0 in)
		235/55 R19	1,628 mm (64.0 in)
	Rear	235/65 R17	1,644 mm (64.7 in)
		235/60 R18	1,639 mm (64.5 in)
		235/55 R19	1,639 mm (64.5 in)
Wheelbase			2,780 mm (109.4 in)

ENGINE

Item	Petrol Theta II 2.4	Petrol Lambda II 3.5
Displacement cc (cu. in)	2,359 (143.95)	3,470 (211.75)
Bore x Stroke mm (in.)	88 x 97 (3.46 X 3.81)	92 x 87 (3.62 X 3.43)
Firing order	1-3-4-2	1-2-3-4-5-6
No. of cylinders	4. In-line	6. V - type

LUGGAGE VOLUME

ITEM		7 Seater
VDA	MIN.	605L (21.3 cu ft)
	MAX.	1,662L (58.6 cu ft)

Min : Behind rear seat to upper edge of the seat back.
Max : Behind front seat to roof.

AIR CONDITIONING SYSTEM

ITEM		Weight of volume	Classification
Refrigerant	FRONT + REAR A/CON	850 ± 25g	R134a
Compressor lubricant	FRONT + REAR A/CON	180 ± 10g	PAG OIL (PAG30)

Please contact a professional workshop for more details.
Kia recommends to contact an authorised Kia dealer/service partner.

GROSS VEHICLE WEIGHT

Kg (Lbs.)

Item		Weight
Thetta II (2.4L)	FWD	2,510 (5,533)
	AWD	2,520 (5,555)
Lamda II (3.5L)	FWD	2,510 (5,553)

BULB WATTAGE

Light Bulb			Wattage (W)	Bulb type
Front	Headlamps (Low)		55	H7SPL
	Headlamps (Low/High) - LED type*		LED	LED
	Headlamps (High)		65	H9
	Front turn signal lamps		21	PY21W
	Front turn signal lamps - LED type*		LED	LED
	Front position lamps	LED type	LED	LED
	Daytime running light*		LED	LED
	Front fog lamps	Bulb type	55	HB4
		LED type	LED	LED
	Side Repeater lamps	Bulb type	5	WY5W
		LED type	LED	LED
Rear	Rear Stop/Tail lamps (outside)	Bulb type	21/5	P21/5
	Rear tail lamps (Inside)		5	P21/5
	Rear fog lamps (BUMPER)		21	P21W
	Rear Stop/Tail lamps (outside)	LED type	LED	LED
	Rear Stop/Tail lamps (Inside)		LED	LED
	Rear fog lamps (BUMPER)		21	P21W
	Rear turn signal lamps		21	P21W
	Back-up lamps		16	W16W
	High mounted stop lamp		LED	LED
	License plate lamps		5	W5W
Interior	Map lamps		10 (LED*)	FESTOON (LED*)
	Room lamps		10 (LED*)	FESTOON (LED*)
	Vanity mirror lamps		LED*	LED*
	Glove box lamp		5	FESTOON
	Luggage room lamp		5	FESTOON

* If equipped

TYRES AND WHEELS (EXCEPT AUSTRALIA, EUROPE AND NEW ZEALAND)

Item	Tyre size	Wheel size	Supplier	Load Capacity		Speed capacity		Inflation pressure [bar(psi, kPa)]				Wheel lug nut torque [Kgf·m (lbf·ft, N·m)]
								Normal load		Maximum load		
				LI *1	Kg	SS *2	Km/h	Front	Rear	Front	Rear	
Full size tyre	235/60R18	7.5JX18	Hankook	103	875	V	240	2.35 (34, 235)	2.35 (34, 235)	2.35 (34, 235)	2.35 (34, 235)	11 ~ 13 (79 ~ 94, 107 ~ 127)
			Nexen			H	210					
Compact spare tyre	T165/90R17	4.0TX17	Kumho	116	1250	M	130	4.2 (60, 420)	4.2 (60, 420)	4.2 (60, 420)	4.2 (60, 420)	

*1 : Load Index

*2 : Speed Symbol

✻ NOTICE

- **We recommend that when replacing tyres, use the same originally supplied with the vehicles. If not, that affects driving performance.**
- **When driving in high altitude grades, it is natural for the atmospheric pressure to decrease. Therefore, please check the tyre pressure and add more air when necessary. Additionally required tyre air pressure per km above sea level: 1.5psi/km**

When replacing tyres, use the same size originally supplied with the vehicle. Using tyres of a different size can damage the related parts or make it work irregularly.

RECOMMENDED LUBRICANTS AND CAPACITIES

To help achieve proper engine and powertrain performance and durability, use only lubricants of the proper quality. The correct lubricants also help promote engine efficiency that results in improved fuel economy.
These lubricants and fluids are recommended for use in your vehicle.

Lubricant			Volume	Classification
Engine oil *1 *2 (drain and refill) Recommends	Petrol Engine	Theta II 2.4 MPI	4.8 l (5.07 US qt.)	API Service SM or above/ILSAC GF-4 or above/ ACEA A5 or above *4
		Lambda II 3.5 MPI	5.7 l (6.02 US qt.)	API Service SM or above/ILSAC GF-4 or above/ ACEA A5 or above *4

			Volume	Classification
Automatic transaxle fluid	Petrol Engine	Theta II 2.4	7.1 l (7.50 US qt.)	ATF SP-IV (Recommended SK, MICHANG)
		Lambda II 3.5	7.8 l (8.24 US qt.)	
Coolant	Petrol Engine	Theta II 2.4 MPI	AT : 7.7 l (8.14 US qt.)	Mixture of antifreeze and distilled water (Ethylene glycol base coolant for aluminum radiator)
			MT : 7.1 l (7.50 US qt.)	
		Lambda II 3.5	9.5 l (10.04 US qt.)	
Brake / Clutch fluid			0.41~0.45 l (0.445~0.485 US qt.)	FMVSS135 DOT-3 or DOT-4

Lubricant			Volume	Classification
Rear differential oil (AWD)			0.53 ~ 0.63 l (0.56 ~ 67 US qt.)	HYPOID GEAR OIL API GL-5, SAE 75W/90 (Recommended: SHELL HD AXLE OIL 75W90 or equivalent)
Transfer case oil (AWD)	Petrol Engine	Theta II 2.4	0.34 ~ 0.36 l (0.36 ~ 0.38 US qt.)	HYPOID GEAR OIL API GL-5, SAE 75W/85 (Recommended: SK HCT-5 GEAR OIL 75W85 or equivalent)
		Lambda II 3.5	0.67 ~ 0.73 l (0.70 ~ 0.77 US qt.)	
Fuel			71 l (75 US qt.)	Refer to Fuel requirements in section 1

*1 : Refer to the recommended SAE viscosity numbers on the next page.

*2 : Engine oils labeled Energy Conserving Oil are now available. Along with other additional benefits, they contribute to fuel economy by reducing the amount of fuel necessary to overcome engine friction. Often, these improvements are difficult to measure in everyday driving, but in a year's time, they can offer significant cost and energy savings.

*3 : Diesel Particulate Filter

*4 : If the API service SM, ILSAC GF-4, ACEA A5 engine oil is not available in your country, you are able to use API service SL, ILSAC GF-3, ACEA A3.

*5 : If the ACEA A5 engine oil is not available in your country, you are able to use API service SL, IL SAC GF-3, ACEA A3.

Recommended SAE viscosity number

Always be sure to clean the area around any filler plug, drain plug, or dipstick before checking or draining any lubricant. This is especially important in dusty or sandy areas and when the vehicle is used on unpaved roads. Cleaning the plug and dipstick areas will prevent dirt and grit from entering the engine and other mechanisms that could be damaged.

Engine oil viscosity (thickness) has an effect on fuel economy and cold weather operating (engine start and engine oil flowability). Lower viscosity engine oils can provide better fuel economy and cold weather performance, however, higher viscosity engine oils are required for satisfactory lubrication in hot weather. Using oils of any viscosity other than those recommended could result in engine damage. When choosing an oil, consider the range of temperature your vehicle will be operated in before the next oil change. Proceed to select the recommended oil viscosity from the chart.

Temperature Range for SAE Viscosity Numbers



VEHICLE IDENTIFICATION NUMBER (VIN)

■ Frame number

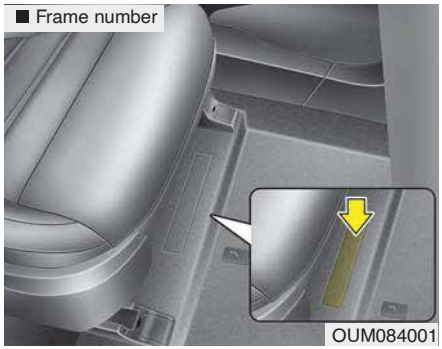

The vehicle identification number (VIN) is the number used in registering your vehicle and in all legal matters pertaining to its ownership, etc.

The number is punched on the floor under the driver or passenger seat. To check the number, open the cover.

■ VIN label (if equipped)
• Type A

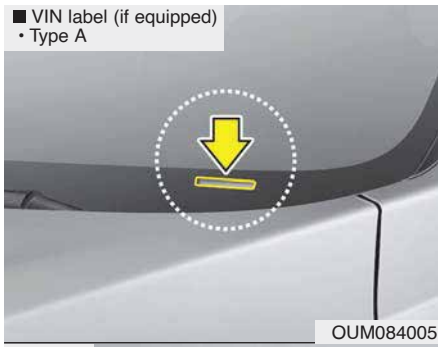

• Type B

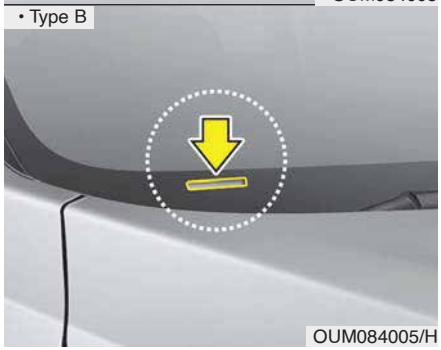

The VIN is also on a plate attached to the top of the dashboard. The number on the plate can easily be seen through the windscreen from outside.

VEHICLE CERTIFICATION LABEL

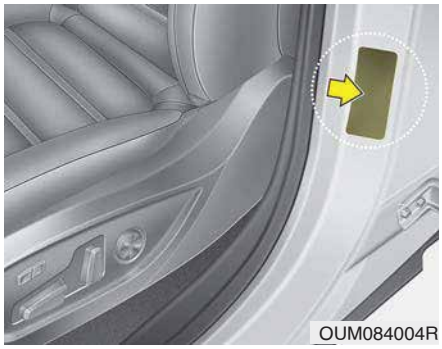

The vehicle certification label attached on the driver's (or front passenger's) side centre pillar gives the vehicle identification number (VIN).

TYRE SPECIFICATION AND PRESSURE LABEL

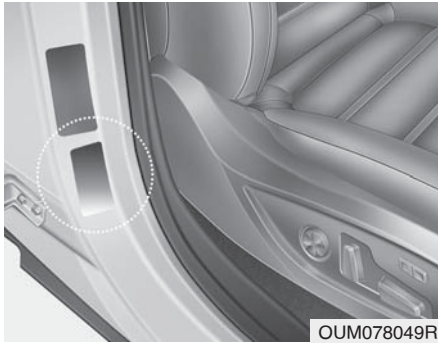

The tyres supplied on your new vehicle are chosen to provide the best performance for normal driving.

The tyre label located on the driver's side centre pillar gives the tyre pressures recommended for your vehicle.

ENGINE NUMBER

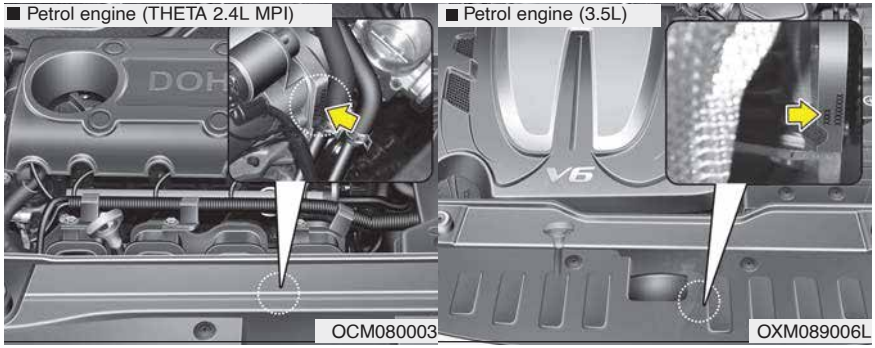

The engine number is stamped on the engine block as shown in the drawing.

AIR CONDITIONER COMPRESSOR LABEL



ODW081001

A compressor label informs you the type of compressor your vehicle is equipped with such as model, supplier part number, production number, refrigerant (1) and refrigerant oil (2).

REFRIGERANT LABEL



OUM088006L

The refrigerant label is located on the underside of the bonnet.

DECLARATION OF CONFORMITY

■ Example

CE 0678

CE0678

The radio frequency components of the vehicle comply with requirements and other relevant provisions of Directive 1995/5/EC.

Further information including the manufacturer's declaration of conformity is available on Kia web site as follows;

http://www.kia-hotline.com

FUEL LABEL (IF EQUIPPED)

Gasoline (Petrol) engine



The fuel label is attached on the fuel filler door.

A. Octane rating of unleaded Gasoline (Petrol)
   1) RON/ROZ : Research Octane Number
   2) (R+M)/2, AKI : Anti Knock Index

B. Identifiers for Petrol-type fuels
   ❊ This symbol means usable fuel. Do not use any other fuel.

C. For further details, refer to the “Fuel Requirement” in the chapter 1.

Index

A

Air bag - supplemental restraint system 3-50
Additional safety precautions 3-70
Air bag warning label 3-71
Air bag warning light 3-54
Curtain air bag 3-62
Driver's and passenger's front air bag 3-53
How does the air bag system operate 3-51
Inflation and non-inflation conditions of the air bag... 3-66
Side air bag 3-62
SRS Care 3-69
SRS components and functions 3-55

Air cleaner 8-28
Filter replacement 8-28
Air conditioner compressor label 9-12
Air conditioning system 9-13
All wheel drive (AWD) 6-19
All Wheel Drive (AWD) transfer mode selection 6-20
For safe all wheel drive operation 6-21
Reducing the risk of a rollover 6-24
Appearance care 8-91
Exterior care 8-91
Interior care 8-97
Audio 5-7
Feature of Your Audio 5-8
Media 5-18
Phone 5-31
Radio 5-16
Setup 5-38
Audio System 5-2
Antenna 5-2
AUX, USB and iPod® port 5-3
How vehicle audio works 5-3
Automatic climate control system 4-125
3rd row air conditioning 4-132
Air Conditioning refrigerant label 4-135
Automatic heating and air conditioning 4-139
Checking the amount of air conditioner refrigerant and compressor lubricant 4-136
Climate control air filter 4-135
Automatic transaxle 6-11
Automatic transaxle operation 6-11
Good driving practices 6-17

B

Battery 8-38
Battery capacity label 8-40
Battery recharging 8-40
For best battery service 8-38
Reset items 8-41
Before driving 6-4

Before entering vehicle....6-4
Before starting 6-4
Necessary inspections....6-4
Bonnet....4-36
Bonnet open warning....4-36
Closing the bonnet....4-37
Opening the bonnet 4-36
Brake system....6-26
Anti-lock brake system (ABS) 6-37
AUTO HOLD (if equipped)....6-35
Electronic Parking Brake (EPB)....6-35
Electronic stability control (ESC)....6-40
Good braking practices....6-50
Hill-start assist control (HAC)....6-46
Power brakes....6-26
Vehicle stability management (VSM)....6-44
Brake/clutch fluid....8-28
Checking the brake/clutch fluid level 8-28
Bulb wattage 9-4

C

Child restraint system....3-38
Using a child restraint system....3-40
Climate control air filter....8-30
Filter inspection....8-30
Cruise Control system....6-51
Cruise control switch....6-52
To cancel cruise control....6-54
To decrease the cruising speed....6-53
To increase cruise control set speed....6-82
To resume cruising speed at more than approximately 30 km/h (20 mph)....6-55
To set cruise control speed....6-52
To temporarily accelerate with the cruise control on...6-1
To turn cruise control off....6-55

D

Declaration of Conformity....5-41,9-16
Defroster....4-137
Rear window defroster....4-140
Dimensions....9-2
Door locks....4-14
Child-protector rear door lock....4-18
Deadlocks....4-17
Door lock/unlock features....4-17
Operating door locks from inside the vehicle....4-15
Operating door locks from outside the vehicle 4-15
Drive mode integrated control system....6-59

E

Economical operation....6-64
Emergency starting....7-5

Jump starting....7-5
Push-starting....7-7
Emission control system....8-102
Crankcase emission control system....8-102
Evaporative emission control system....8-101
Exhaust emission control system....8-103
Engine....9-2
Engine compartment....2-6,8-4
Engine coolant....8-25
Changing the coolant....8-27
Engine number....9-15
Engine oil (Petrol)....8-23
Changing the engine oil and filter....8-24
Checking the engine oil level....8-23
Engine start/stop button....6-6
Engine start/stop button position....6-6
Illuminated engine start/stop button....6-6
Starting the engine....6-8
Explanation of scheduled maintenance items....8-19
Exterior features....4-157
Roof rack (if equipped)....4-157
Exterior overview....2-2

F

Brake operation....6-67
Downhill Brake Control (DBC)....6-77
Good braking practices....6-50
System malfunction....6-54
System setting and activation....6-60
Fuel filler door....4-38
Closing the fuel filler door....4-38
Emergency fuel filler door release....4-39
Opening the fuel filler door....4-38
Fuel label....9-13
Gasoline (Petrol) engine....9-13
Fuel requirements....1-3
Petrol engine....1-3
Fuses....8-53
Engine compartment fuse replacement....8-53
Fuse/relay panel description....8-59
Inner panel fuse replacement....8-55

G

Gross vehicle weight....7-3

H

How to use this manual....1-2

I

If the engine overheats....7-8

If the engine will not start 7-4
If engine doesn't turn over or turns over slowly 7-4
If engine turns over normally but does not start 7-4
If you have a flat tyre (with spare tyre) 7-9
Changing tyres 7-9
EC Declaration of Conformity for Jack 7-18
Jack and tools..... 7-18
Jack label 7-18
Removing and storing the spare tyre 7-10
In case of an emergency whilst driving.....7-3
If engine stalls whilst driving.....7-3
If the engine stalls at a crossroad or crossing.....7-3
If you have a flat tyre whilst driving.....7-3
Instrument cluster.....4-53
Gauges.....4-53
Instrument Cluster Control.....4-53
LCD Display Control.....4-55
Instrument panel overview.....2-5
Intelligent Speed Limit Warning activation /
Interior features.....4-144
Ashtray.....4-144
Bottle holder.....4-146
Cargo security screen.....4-155
Cigarette lighter.....4-144
Clothes hanger.....4-153
Cup holder.....4-145
Floor mat anchor(s).....4-153
Luggage net holder.....4-154
Power outlet.....4-147
Side curtain.....4-154
Sunvisor.....4-147
USB charger.....4-154
Wireless smart phone charging system.....4-143
Interior light.....4-120
Automatic turn off function.....4-120
Glove box lamp.....4-122
Luggage lamp.....4-122
Map lamp 4-120
Room lamp.....4-121
Vanity mirror lamp.....4-122
Interior overview.....2-4

K

Keys.....4-6

L

LCD Display.....4-60
Distance to empty.....4-62
LCD Modes.....4-64
Trip modes (Trip computer).....4-66
User Settings Mode.....4-67
Warning Messages.....4-72
Light bulbs.....8-71
Back up lamp (Bulb type) bulb replacement.....8-71

Door courtesy lamp bulb replacement....8-72
Front fog lamp bulb replacement....8-109
Front turn signal lamp bulb replacement (Headlamp Type A)....8-75
Glove box lamp replacement....8-84
Headlamp (High beam) bulb replacement (Headlamp Type A)....8-73
Headlamp (LED type) replacement (Headlamp Type B)....8-73
Headlamp (Low beam) bulb replacement (Headlamp Type A)....8-104
High mounted stop lamp bulb replacement....8-74
License plate lamp bulb replacement....8-74
Luggage lamp bulb replacement....8-75
Map lamp (Bulb type) bulb replacement....8-75
Map lamp (LED type) bulb replacement....8-77
Personal lamp (LED type) bulb replacement....8-118
Position lamp / Day time running lamp (LED type) replacement (Headlamp Type A)....8-107
Rear fog lamp bulb replacement....8-114
Room lamp bulb replacement....8-83
Side repeater lamp (LED type) bulb replacement....8-84
Stop and tail lamp (LED type) bulb replacement....8-84
Vanity mirror lamp bulb replacement....8-85
Lighting....4-103
Battery saver function....4-103
Daytime running light....4-104
Front fog light....4-109
Headlight escort function....4-112
Headlight levelling device....4-110
High beam operation....4-107
Lighting control....4-106
Rear fog light....4-106
Turn signals and lane change signals....4-105
Luggage volume....9-4

M

Maintenance services....8-6
Owner maintenance precautions....8-6
Owner's responsibility....8-6
Mirrors....4-51
Inside rearview mirror....4-51
Outside rearview mirror....4-51

O

Owner maintenance....8-9
Owner maintenance schedule....8-9

P

Panorama sunroof....4-50

Closing the sunroof....4-53
Resetting the sunroof....4-44
Sliding the sunroof 4-42
Sunroof open warning 4-43
Sunshade 4-43
Tilting the sunroof 4-43
Parking Distance Warning (PDW) 4-97
Non-operational conditions of parking distance warning 4-99
Operation of the parking assist system 4-99
Self-diagnosis....4-101
Parking Distance Warning-Reverse (PDW-R) 4-93
Non-operational conditions of parking distance warning-reverse 4-94
Operation of the parking distance warning-reverse.4-93
Parking distance warning-reverse precautions....4-95
Self-diagnosis....4-96

R

Rearview camera....4-102
Recommended lubricants and capacities 9-9
Recommended SAE viscosity number....9-9
Refrigerant and compressor lubricant 4-135
Refrigerant label....9-14
Remote keyless entry 4-8
Road warning 7-2
Hazard warning flasher 7-2

S

Scheduled maintenance service 8-11
Scheduled maintenanceservice precaution 8-11
Seat belts....3-27
Care of seat belts 3-42
Pre-tensioner seat belt 3-37
Seat belt precautions 3-24
Seat belt restraint system....3-24
Seats 3-2
Front seat adjustment - manual 3-6
Front seat adjustment - power 3-7
Headrest (for front seat)....3-12
Headrest (for rear seat) 3-23
Rear seat adjustment 3-13
Seatback pocket 3-13
Special driving conditions 6-66
Driving at night 6-69
Driving in flooded areas 6-70
Driving in the rain 6-69
Driving off-road....6-70
Hazardous driving conditions 6-70
Highway driving 6-70
Reducing the risk of a rollover 6-66
Rocking the vehicle 6-67
Smooth cornering....6-68
Steering wheel 4-45

Electric power steering (EPS) 4-45
FLEX steering wheel 4-47
Horn 4-46
Tilt & telescopic steering 4-46
Storage compartment 4-141
Centre console storage 4-141
Glove box 4-141
Luggage box 4-143
Sunglass holder 4-142

T

Tailgate 4-19
Emergency tailgate safety release 4-30
Non-power tailgate 4-19
Power tailgate 4-20
Smart tailgate 4-20
Theft-alarm system 4-11
Armed stage 4-11
Disarmed stage 4-11
Towing 7-19
Emergency towing 7-21
Removable towing hook 7-21
Towing service 7-21
Tyre specification and pressure label 9-11
Tyres and wheels 8-42
Checking tyre inflation pressure 8-43
Low aspect ratio tyre 8-52
Recommended cold tyre inflation pressures 8-42
Tyre care 8-42
Tyre maintenance 8-48
Tyre replacement 8-46
Tyre rotation 8-44
Tyre sidewall labeling 8-48
Tyre traction 8-48
Wheel alignment and tyre balance 8-47
Wheel replacement 8-47
Tyres and wheels 9-5

V

Vehicle break-in process 1-6
Vehicle certification label 9-10
Vehicle handling instructions 1-6
Vehicle identification number (VIN) 9-10
Vehicle modifications 1-6
Vehicle weight 6-86
Base kerb weight 6-86
Cargo weight 6-86
GAW (Gross axle weight) 6-86
GAWR (Gross axle weight rating) 6-86
GVW (Gross vehicle weight) 6-86
GVWR (Gross vehicle weight rating) 6-86
Loading Your Vehicle - For Australia 6-86

Overloading 6-86
Vehicle kerb weight 6-86

W

Warning and indicator lights.....4-77
Indicator Lights 4-88
Warning lights 4-77
Washer fluid 8-29
Checking the washer fluid level.....8-29
Welcome system 4-123
Headlight (Headlamp) escort function.....4-123
Interior light 4-123
Pocket lamp 4-123
Windows 4-31
Power windows 4-32
Windscreen defrosting and defogging 4-137
Automatic climate control system 4-137
Winter driving.....6-72
Carry emergency equipment 6-76
Change to "winter weight" oil if necessary 6-75
Check battery and cables 6-75
Check spark plugs and ignition system 6-75
Don't let ice and snow accumulate underneath 6-76
Don't let your parking brake freeze 6-76
Snowy or Icy conditions 6-72
To keep locks from freezing 6-75
Use approved window w asher anti-freezein system....6-75
Use high quality ethylene glycol coolant 6-75
Wiper blades 8-34
Blade inspection.....8-34
Blade replacement 8-34
Wipers and washers 4-114
Rear window wiper and washer switch 4-118
Windscreen washers.....4-117
Windscreen wipers 4-115